LOT 411
NORTH HAMPTON PHASE 3 PB 7/16

VOGEL ROBERT & JANICE REV TRUST/VOGEL ROBERT ANDRE
85037 BARSONAGE CT
FERNANDINA BEACH, FL 32034

2025

12-2N-27-1460-0411-0000

NASSAU COUNTY PROPERTY

BUILDING CHARACTERISTICS

ELEMENT	CD	CONSTRUCTION
Exterior Wall	16	WD FR STUC 100
Roof Structur	08	IRREGULAR 100
Roof Cover	03	COMP SHNGL 100
Interior Wall	05	DRYWALL 100
Interior Floo	11	CLAY TILE 60
Interior Floo	14	CARPET 40
Air Condition	03	CENTRAL 100
Heating Type	04	AIR DUCTED 100
Bedrooms		4 100
Bathrooms		4.5 100
Frame	02	WOOD FRAME 100
Stories	2.	2. 100
Units		0 100
Occupancy	00	NONE 100
Quality	04	Quality Level 04
DOR CODE	0100	SINGLE FAMILY
MAP NUM		MKT AREA 04
NEIGHBORHOOD/LOC	4043.00	

AREA TYPE	TOTAL GROSS AREA	PCT OF BASE	YEAR	TOT ADJ AREA	SUBAREA MARKET VALUE
BAL	254	15	2020	38	5,442
BAS	2,481	100	2020	2,481	355,274
FGR	726	55	2020	399	57,136
FOP	200	30	2020	60	8,592
FSP	580	40	2020	232	33,222
FUS	990	100	2020	990	141,766
STR	57	10	2020	6	859
TOTALS	5,288			4,206	602,289

MARKET ADJUSTMENTS

TYPE	MDL	EFF. AREA	TOT ADJ PTS	EFF. BASE RATE	REPL. COST NEW	AYB	EYB	ECON	FNCT		NORM	% COND
0900	01	4,206	110.6952	146.12	614,581	2020	2020	0	0	0	2.00	98.00

1 SNGL FAM – 100% - 2022 Heated Area: 3471 HX Base Yr 2022

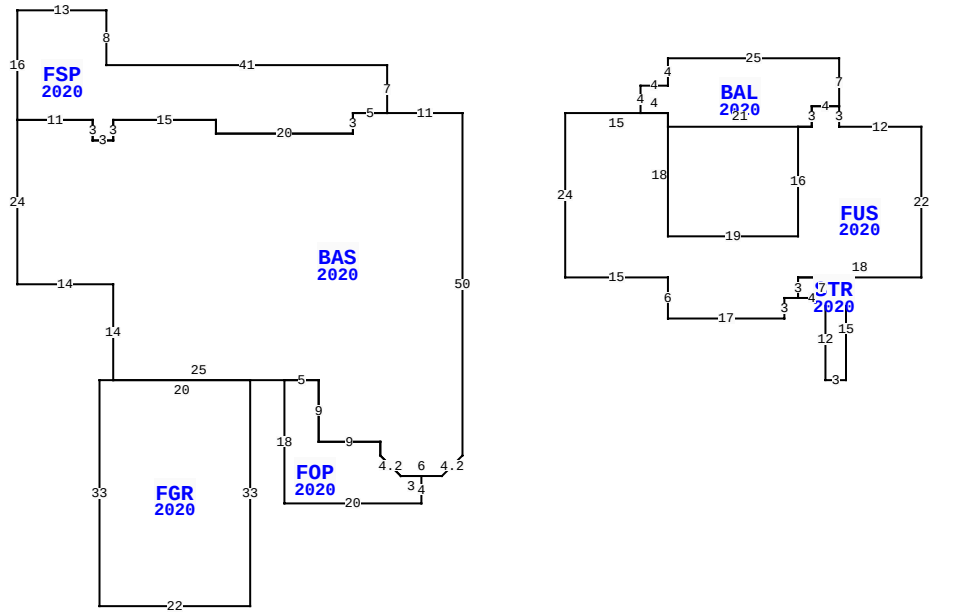

85037 BARSONAGE CT, FERNANDINA BEACH

BLD DATE		LGL DATE	
XF DATE		LAND DATE	05/09/2025 MLU
INC DATE		AG DATE	

VALUATION SUMMARY

VALUATION BY		STANDARD
Tax Group: 4	Tax Dist:	
BUILDING MARKET VALUE		602,289
TOTAL MARKET OB/XF VALUE		93,542
TOTAL LAND VALUE - MARKET		175,000
TOTAL MARKET VALUE		870,831
SOH/AGL Deduction		166,945
ASSESSED VALUE		703,886
TOTAL EXEMPTION VALUE	DX HX HB	55,722
BASE TAXABLE VALUE		648,164
TOTAL JUST VALUE		870,831
NCON VALUE		0
INCOME VALUE		
PREVIOUS YEAR MKT VALUE		796,906

PERMIT NUM	DESCRIPTION	AMT	ISSUED
20003321	CO ISSUED	0	04/17/2020
19009875	POOL ENCL	15,000	03/25/2020
B1910765	SWIM POOL	85,600	10/11/2019
19005369	NEW CONSTR	527,348	06/25/2019

SALES DATA

OFF RECORD Number	DATE	TYPE INST	Q U	V I	RSN CD	SALE PRICE
2655/718	6/29/2023	QC	U	I	11	100
GRANTOR: VOGEL ROBERT A & JANI						
GRANTEE: VOGEL ROBERT & JANI						
2243/0438	11/16/2018	WD	U	V	11	100
GRANTOR: BRESETTE JOSEPH R & D						
GRANTEE: VOGEL ROBERT A & JA						

BUILDING NOTES

EXTRA FEATURES

LN	OB/XF CODE	DESCRIPTION	BLD	CAP	L	W	UNITS	UT	Adj R	ADJ UNIT PRICE	ORIG COND	YEAR ON	YEAR ACTUAL	Q	% COND	OB/XF MKT VALUE	NOTES
1	0855	CONC PAVER	0	100	0	0	2,149.00	SF	10.00	10.00	100	2020	2020	3	98	21,060	
2	0504	FP-ELECTRI	0	100	0	0	1.00	UT	2,000.00	2,000.00	100	2020	2020	3	99	1,980	
3	0861	POOL GUNIT	0	100	0	0	456.00	SF	85.00	85.00	100	2020	2020	3	90	34,884	
4	0871	POOL HTR R	0	100	0	0	1.00	UT	2,000.00	2,000.00	100	2020	2020	3	86	1,720	
5	0911	SCRN RM A	0	100	0	0	1,192.00	SF	17.50	17.50	100	2020	2020	3	86	17,940	
6	0857	SANDSTONE/	0	100	0	0	736.00	SF	16.00	16.00	100	2020	2020	3	99	11,658	
7	0600	SUMMER KIT	0	100	0	0	1.00	UT	5,000.00	5,000.00	100	2020	2020	3	86	4,300	

BUILDING DIMENSIONS

BAS=[YR=2020] W11 FSP=[YR=2020] N7 W41 N8 W13 S16 E11 S3 E3 N3 E15 S2 E20 N3 E5$ W5 S3 W20 N2 W15 S3 W3 N3 W11 S24 E14 S14 FGR=[YR=2020] W2 S33 E22 N33 W20$ E25 FOP=[YR=2020] S18 E20 N4 W3 L3 U3 N2 W9 N9 W5$ E5 S9 E9 S2 D3 R3 E6 R3 U3 N50$ PTR=E15 FUS=[YR=2020] S24 E15 S6 E17 N3 E2 STR=[YR=2020] E4 S12 E3 N15 W7 S3$ N3 E18 N22 W12 N3 BAL=[YR=2020] N7 W25 S4 W4 S4 E4 S2 E21 N3 E4$ W4 S3 W2 S16 W19N18 W15$ W15$.

LAND DESCRIPTION

TOTAL OB/XF 93,542

LN	USE CODE	CLS	LAND USE DESCRIPTION	CAP	RD	LOC ZONE	FRONT	DEPTH	TOT LND UTS	UNIT TYPE	DT	DPTH FACT	% COND	TOT ADJ	UNIT PRICE	ADJ UNIT PRICE	LAND VALUE	OTHER ADJUSTMENTS AND NOTES	YEAR	DENSITY	DECL	FRZ	YR	CONSRV
1	000116	C	RES MARSH	100		PUD	0.00	0.00	1.00	LT		1.00	1.00	1.00	175,000.00	175,000.00	175,000							

REVIEW DATE 09/24/2020 BY NW Total Acres: 0.00 Total Land Value: 175,000 Market: 0 Agricultural: 0 Common: 175,000 PRINTED 07/30/2025 BY SYS