LOT 384
NORTH HAMPTON PHASE 3 PB 7/16

KAPLAN FAMILY TRUST/KAPLAN PAUL S TRUSTEE
85071 NAPEAGUE DR
FERNANDINA BEACH, FL 32034

2025

12-2N-27-1460-0384-0000

BUILDING CHARACTERISTICS

ELEMENT	CD	CONSTRUCTION
Exterior Wall	16	WD FR STUC 100
Roof Structur	08	IRREGULAR 100
Roof Cover	03	COMP SHNGL 100
Interior Wall	05	DRYWALL 100
Interior Floo	12	HARDWOOD 50
Interior Floo	14	CARPET 50
Air Condition	03	CENTRAL 100
Heating Type	04	AIR DUCTED 100
Bedrooms		4 100
Bathrooms		3.5 100
Frame	02	WOOD FRAME 100
Stories	2.	2. 100
Units		0 100
Occupancy	00	NONE 100
Quality	06	Quality Level 06
DOR CODE	0100	SINGLE FAMILY
MAP NUM		MKT AREA 04
NEIGHBORHOOD/LOC	4043.00	

AREA TYPE	TOTAL GROSS AREA	PCT OF BASE	YEAR	TOT ADJ AREA	SUBAREA MARKET VALUE
BAS	2,334	100	2015	2,334	397,804
FGR	818	55	2015	450	76,698
FOP	150	30	2015	45	7,670
FSP	372	40	2015	149	25,395
FST	15	55	2015	8	1,364
FUS	1,602	100	2015	1,602	273,043
STR	72	10	2015	7	1,193
TOTALS	5,363			4,595	783,167

MARKET ADJUSTMENTS

TYPE	MDL	EFF. AREA	TOT ADJ PTS	EFF. BASE RATE	REPL. COST NEW	AYB	EYB	ECON	FNCT		NORM	% COND
0900	11	4,595	135.2049	178.47	820,070	2015	2015	0	0	0	4.50	95.50

1 SNGL FAM – 100% - 2019 Heated Area: 3936 HX Base Yr 2019

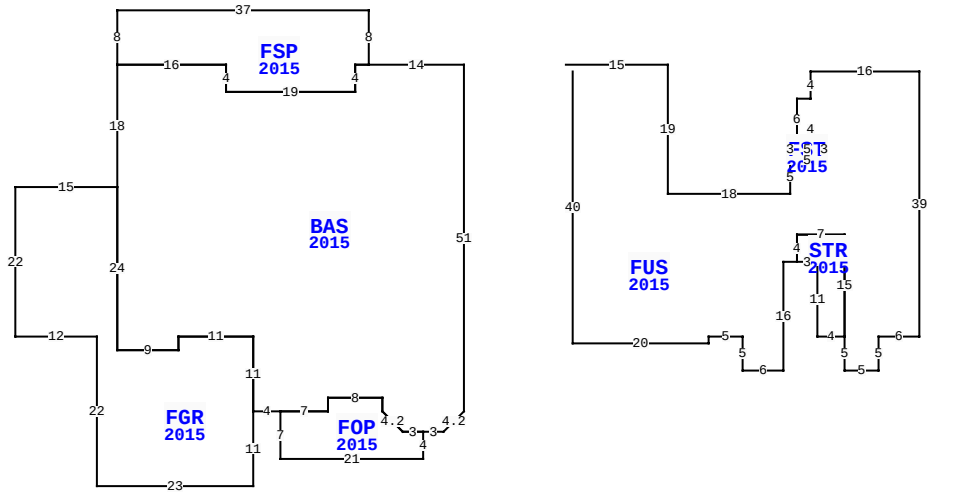

85071 NAPEAGUE DR, FERNANDINA BEACH

BLD DATE	09/22/2015 KK	LGL DATE	
XF DATE		LAND DATE	05/09/2025 MLU
INC DATE		AG DATE	

NASSAU COUNTY PROPERTY

PAGE 1 of 1 4

VALUATION SUMMARY

VALUATION BY		STANDARD
Tax Group: 4	Tax Dist:	
BUILDING MARKET VALUE		783,167
TOTAL MARKET OB/XF VALUE		43,477
TOTAL LAND VALUE - MARKET		155,000
TOTAL MARKET VALUE		981,644
SOH/AGL Deduction		437,499
ASSESSED VALUE		544,145
TOTAL EXEMPTION VALUE	HX HB	50,722
BASE TAXABLE VALUE		493,423
TOTAL JUST VALUE		981,644
NCON VALUE		0
INCOME VALUE		
PREVIOUS YEAR MKT VALUE		917,408

PERMIT NUM	DESCRIPTION	AMT	ISSUED
2002794	SCRN ENCL	25,912	05/06/2020
B1530288	CO ISSUED	0	08/25/2015
B1530288	NEW CONSTR	487,139	04/01/2015

SALES DATA

OFF RECORD Number	DATE	TYPE INST	Q / U	V / I	RSN CD	SALE PRICE
2373/1221	7/02/2020	WD	U	I	11	100
GRANTOR: KAPLAN PAUL & CATHERI						
GRANTEE: KAPLAN FAMILY TRUST						
2244/1611	12/20/2018	WD	Q	I	02	500,000
GRANTOR: JONES SHANEA D						
GRANTEE: KAPLAN PAUL & CATHE						

BUILDING NOTES

EXTRA FEATURES

L N	OB/XF CODE	DESCRIPTION	BLD	CAP	L	W	UNITS	UT	Adj R	ADJ UNIT PRICE	ORIG COND	YEAR ON	YEAR ACTUAL	Q	% COND	OB/XF MKT VALUE	NOTES
1	0500	FP-PRE FAB	0	100	0	0	1.00	UT	3,500.00	3,500.00	100	2015	2015	3	96	3,360	
2	0855	CONC PAVER	0	100	0	0	1,091.00	SF	10.00	10.00	100	2015	2015	3	95	10,365	
3	0855	CONC PAVER	0	100	0	0	173.00	SF	10.00	10.00	100	2015	2015	3	95	1,644	
4	0855	CONC PAVER	0	100	0	0	134.00	SF	10.00	10.00	100	2015	2015	3	95	1,273	
5	0855	CONC PAVER	0	100	0	0	18.00	SF	10.00	10.00	100	2015	2015	3	95	171	
6	0911	SCRN RM A	0	100	0	0	1,073.00	SF	17.50	17.50	100	2020	2020	3	86	16,149	
7	0855	CONC PAVER	0	100	0	0	1,073.00	SF	10.00	10.00	100	2020	2020	3	98	10,515	

BUILDING DIMENSIONS

BAS=[YR=2015;ORIG=0,0] W14 W2 S4 W19 N4 W16 S18 S24 E9 N2 E11 S11 E4 E7 N2 E8 S2 D3R3 E3 E3 U3R3 N51 $
FUS=[YR=2015;ORIG=15,0] E15 S19 E18 N5 E5 N3 W4 N6 E2 N4 E16 S39 W6 S5 W5 N5 N15 W7 S4 W2 S16 W6 N5 W5 S1 W20 N40 $
FGR=[YR=2015;ORIG=-51,18] W15 S22 E12 S22 E23 N11 N11 W11 S2 W9 N24 $
FSP=[YR=2015;ORIG=-14,0] N8 W37 S8 E16 S4 E19 N4 E2 $
FOP=[YR=2015;ORIG=-27,51] S7 E21 N4 W3 U3L3 N2 W8 S2 W7 $
STR=[YR=2015;ORIG=56,40] W4 N11 W3 N4 E7 S15 $
FST=[YR=2015;ORIG=48,14] E5 N3 W5 S3 $
PTR=[ORIG=0,0] E15 W15 $
.

LAND DESCRIPTION

TOTAL OB/XF 43,477

L N	USE CODE	CLS	LAND USE DESCRIPTION	CAP	R D	LOC ZONE	FRONT	DEPTH	TOT LND UTS	UNIT TYPE	D T	DPTH FACT	% COND	TOT ADJ	UNIT PRICE	ADJ UNIT PRICE	LAND VALUE	OTHER ADJUSTMENTS AND NOTES	YEAR	DENSITY	DECL	FRZ	YR	CONSRV
1	000140	C	RES GOLF	100		PUD	0.00	0.00	1.00	LT		1.00	1.00	1.00	155,000.00	155,000.00	155,000							

REVIEW DATE 09/24/2020 BY NW Total Acres: 0.00 Total Land Value: 155,000 Market: 0 Agricultural: 0 Common: 155,000 PRINTED 07/30/2025 BY SYS