LOT 320
IN OR 2056/1051
NORTH HAMPTON PHASE 2 PB 6/328

SPUNG SHARON/THOMPSON COURTNEY RENEE
861440 NORTH HAMPTON CLUB WAY
FERNANDINA BEACH, FL 32034

2025

12-2N-27-1460-0320-0000

NASSAU COUNTY PROPERTY

BUILDING CHARACTERISTICS

ELEMENT	CD	CONSTRUCTION
Exterior Wall	10	ABOVE AVG 100
Roof Structur	08	IRREGULAR 100
Roof Cover	03	COMP SHNGL 100
Interior Wall	05	DRYWALL 100
Interior Floo	11	CLAY TILE 60
Interior Floo	14	CARPET 40
Air Condition	03	CENTRAL 100
Heating Type	04	AIR DUCTED 100
Bedrooms		5 100
Bathrooms		4 100
Frame	02	WOOD FRAME 100
Stories	1.5	1.5 100
Units		0 100
Occupancy	00	NONE 100
Quality	04	Quality Level 04
DOR CODE	0100	SINGLE FAMILY
MAP NUM		MKT AREA 04
NEIGHBORHOOD/LOC	4043.00	

AREA TYPE	TOTAL GROSS AREA	PCT OF BASE	YEAR	TOT ADJ AREA	SUBAREA MARKET VALUE
BAS	2,527	100	2016	2,527	372,514
FGR	622	55	2016	342	50,415
FOP	65	30	2016	20	2,948
FOP	208	30	2016	62	9,140
FUS	375	100	2016	375	55,280
PTO	128	5	2016	6	885
STR	69	10	2016	7	1,032
TOTALS	3,994			3,339	492,214

MARKET ADJUSTMENTS

TYPE	MDL	EFF. AREA	TOT ADJ PTS	EFF. BASE RATE	REPL. COST NEW	AYB	EYB	ECON	FNCT		NORM	% COND
0900	01	3,339	115.7268	152.76	510,066	2016	2016	0	0	0	3.50	96.50

1 SNGL FAM – 100% - 2017 Heated Area: 2902 HX Base Yr 2017

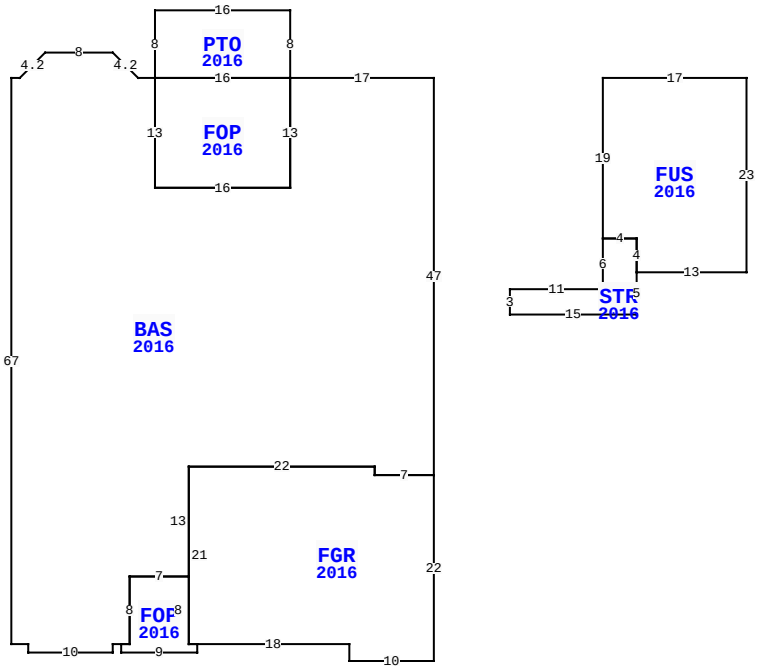

861440 NORTH HAMPTON CLUB WAY, FERNANDINA BEACH

BLD DATE	03/29/2023	NW	LGL DATE
XF DATE			LAND DATE
INC DATE			AG DATE

VALUATION SUMMARY

VALUATION BY		STANDARD
Tax Group: 4	Tax Dist:	
BUILDING MARKET VALUE		492,214
TOTAL MARKET OB/XF VALUE		53,350
TOTAL LAND VALUE - MARKET		127,500
TOTAL MARKET VALUE		673,064
SOH/AGL Deduction		287,861
ASSESSED VALUE		385,203
TOTAL EXEMPTION VALUE	HX HB	50,722
BASE TAXABLE VALUE		334,481
TOTAL JUST VALUE		673,064
NCON VALUE		0
INCOME VALUE		
PREVIOUS YEAR MKT VALUE		651,131

PERMIT NUM	DESCRIPTION	AMT	ISSUED
18009117	ADDITION	21,940	12/01/2018
18008546	SWIM POOL	41,000	08/21/2018
B1530962	CO ISSUED	0	02/29/2016
B1530962	NEW CONSTR	363,266	08/01/2015

SALES DATA

OFF RECORD Number	DATE	TYPE INST	Q / U	V / I	RSN CD	SALE PRICE
2056/1051	2/26/2016	WD	U	I	11	100
GRANTOR: DREAM FINDERS HOMES L						
GRANTEE: SPUNG SHARON & COUR						
2031/1673	2/26/2016	WD	Q	I	01	316,800
GRANTOR: DREAM FINDERS HOMES L						
GRANTEE: SPUNG SHARON & COUR						

BUILDING NOTES

BUILDING DIMENSIONS

BAS=[YR=2016] W17 PTO=[YR=2016] N8 W16 S8 E16$
FOP=[YR=2016] W16 S13 E16 N13$ S13 W16 N13 W2 U3 L3 W8 L3
D3 W1 S67 E2 S1 E10 N1 E1 FOP=[YR=2016] S1 E9 N1
FGR=[YR=2016] E18 S2 E10 N22 W7 N1 W22 S21 E1$ W1 N8 W7 S8
W1$ E1 N8 E7 N13 E22 S1 E7 N47$ PTR=E20 FUS=[YR=2016] E17
S23 W13 STR=[YR=2016] S5 W15 N3 E11 N6 E4 S4$ N4 W4 N19$
W20$.

EXTRA FEATURES

LN	OB/XF CODE	DESCRIPTION	BLD	CAP	L	W	UNITS	UT	Adj R	ADJ UNIT PRICE	ORIG COND	YEAR ON	YEAR ACTUAL	Q	% COND	OB/XF MKT VALUE	NOTES
1	0810	CONCRETE A	0	100	39	3	117.00	SF	6.50	6.50	100	2016	2016	3	95	722	
2	0812	CONCRETE C	0	100	0	0	1,239.00	SF	4.00	4.00	100	2016	2016	3	95	4,708	
3	0463	FENCE GATE	0	100	0	0	1.00	UT	300.00	300.00	100	2016	2016	3	89	267	
4	0462	ST/AL FNC	0	100	180	0	720.00	SF	10.00	10.00	100	2016	2016	3	78	5,616	
5	0861	POOL GUNIT	0	100	0	0	334.00	SF	85.00	85.00	100	2018	2018	3	84	23,848	
6	0855	CONC PAVER	0	100	0	0	557.00	SF	10.00	10.00	100	2018	2018	3	97	5,403	
7	0911	SCRN RM A	0	100	33	27	891.00	SF	17.50	17.50	100	2019	2019	3	82	12,786	

LAND DESCRIPTION

TOTAL OB/XF 53,350

LN	USE CODE	CLS	LAND USE DESCRIPTION	CAP	RD	LOC ZONE	FRONT	DEPTH	TOT LND UTS	UNIT TYPE	DT	DPTH FACT	% COND	TOT ADJ	UNIT PRICE	ADJ UNIT PRICE	LAND VALUE	OTHER ADJUSTMENTS AND NOTES	YEAR	DENSITY	DECL	FRZ	YR	CONSRV
1	000135	C	RES NATURAL	100		PUD	0.00	0.00	1.00	LT		1.00	1.00	1.00	127,500.00	127,500.00	127,500							

REVIEW DATE 07/09/2019 BY TWX Total Acres: 0.00 Total Land Value: 127,500 Market: 0 Agricultural: 0 Common: 127,500 PRINTED 07/30/2025 BY SYS