LOT 241
IN OR 1171/1647
NORTH HAMPTON PHASE 1 PB 6/215

WILLIAMS DWIGHT D & TERRIE
85664 BOSTICK WOOD DRIVE
FERNANDINA BEACH, FL 32034

2025

12-2N-27-1460-0241-0000

BUILDING CHARACTERISTICS

ELEMENT	CD	CONSTRUCTION
Exterior Wall	16	WD FR STUC 100
Roof Structur	08	IRREGULAR 100
Roof Cover	03	COMP SHNGL 100
Interior Wall	05	DRYWALL 100
Interior Floo	11	CLAY TILE 60
Interior Floo	14	CARPET 40
Air Condition	03	CENTRAL 100
Heating Type	04	AIR DUCTED 100
Bedrooms		5 100
Bathrooms		4.5 100
Frame	02	WOOD FRAME 100
Stories	2.	2. 100
Units		0 100
Occupancy	00	NONE 100
Quality	04	Quality Level 04

DOR CODE 0100 SINGLE FAMILY
MAP NUM | MKT AREA 04
NEIGHBORHOOD/LOC 4043.00

AREA TYPE	TOTAL GROSS AREA	PCT OF BASE	YEAR	TOT ADJ AREA	SUBAREA MARKET VALUE
BAL	220	15	2004	33	4,304
BAS	1,829	100	2004	1,829	238,520
FGR	551	55	2004	303	39,515
FOP	70	30	2004	21	2,739
FUS	1,970	100	2004	1,970	256,908
PTO	220	5	2004	11	1,435
TOTALS	4,860			4,167	543,418

MARKET ADJUSTMENTS

TYPE	MDL	EFF. AREA	TOT ADJ PTS	EFF. BASE RATE	REPL. COST NEW	AYB	EYB	ECON	FNCT		NORM	% COND
0900	01	4,167	109.7712	144.90	603,798	2004	2004	0	0	0	10.00	90.00

1 SNGL FAM – 100% - 2005 Heated Area: 3799 HX Base Yr 2005

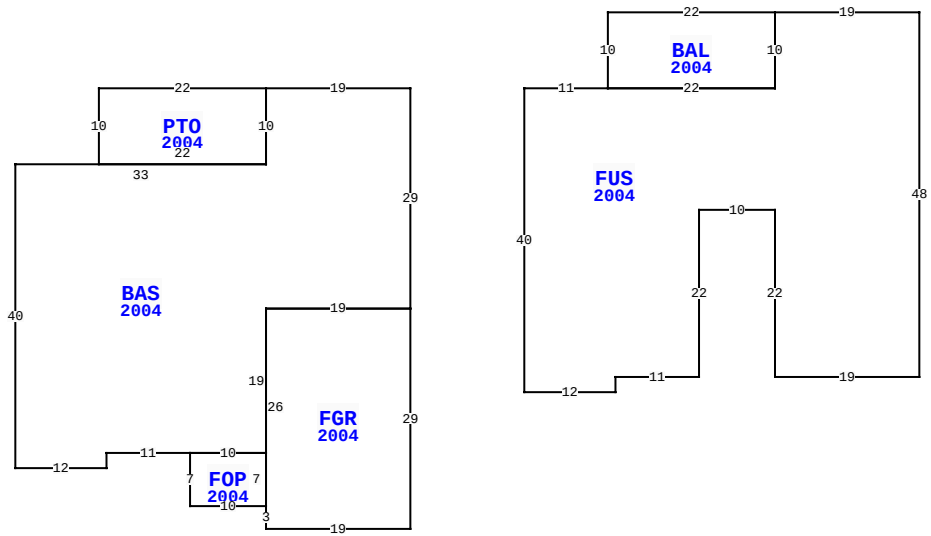

BLD DATE 03/29/2023 NW | LGL DATE
XF DATE | LAND DATE
INC DATE | AG DATE

85664 BOSTICK WOOD DR, FERNANDINA BEACH

NASSAU COUNTY PROPERTY

PAGE 1 of 1 4

VALUATION SUMMARY

VALUATION BY		STANDARD
Tax Group: 4	Tax Dist:	
BUILDING MARKET VALUE		543,418
TOTAL MARKET OB/XF VALUE		9,746
TOTAL LAND VALUE - MARKET		127,500
TOTAL MARKET VALUE		680,664
SOH/AGL Deduction		334,220
ASSESSED VALUE		346,444
TOTAL EXEMPTION VALUE	HX HB VX	55,722
BASE TAXABLE VALUE		290,722
TOTAL JUST VALUE		680,664
NCON VALUE		0
INCOME VALUE		
PREVIOUS YEAR MKT VALUE		654,797

PERMIT NUM	DESCRIPTION	AMT	ISSUED
17004144	REMODEL	1,500	07/06/2017
B0412209	NEW CONSTR	0	01/01/2004

SALES DATA

OFF RECORD Number	DATE	TYPE INST	Q / U	V / I	RSN CD	SALE PRICE
1171/1647	9/16/2003	WD	Q	V		70,400

GRANTOR: NORTH HAMPTON LLC
GRANTEE: WILLIAMS DWIGHT D &

BUILDING NOTES

BUILDING DIMENSIONS

BAS=[YR=2004] W19 PTO=[YR=2004] W22 S10 E22 N10$ S10 W33 S40 E12 N2 E11 FOP=[YR=2004] S7 E10 FGR=[YR=2004] S3 E19 N29 W19 S26$ N7 W10$ E10 N19 E19 N29$ PTR=E15 FUS=[YR=2004] E11 BAL=[YR=2004] N10 E22 S10 W22$ E22 N10 E19 S48 W19 N22 W10 S22 W11 S2 W12 N40$ W15$.

EXTRA FEATURES

L N	OB/XF CODE	DESCRIPTION	BLD	CAP	L	W	UNITS	UT	Adj R	ADJ UNIT PRICE	ORIG COND	YEAR ON	YEAR ACTUAL	Q	% COND	OB/XF MKT VALUE	NOTES
1	0500	FP-PRE FAB	0	100	0	0	2.00	UT	3,500.00	3,500.00	100	2004	2004	3	87	6,090	
2	0811	CONCRETE B	0	100	0	0	847.00	SF	5.20	5.20	100	2004	2004	3	83	3,656	

LAND DESCRIPTION

TOTAL OB/XF 9,746

L N	USE CODE	CLS	LAND USE DESCRIPTION	CAP	R D	LOC ZONE	FRONT	DEPTH	TOT LND UTS	UNIT TYPE	D T	DPTH FACT	% COND	TOT ADJ	UNIT PRICE	ADJ UNIT PRICE	LAND VALUE	OTHER ADJUSTMENTS AND NOTES	YEAR	DENSITY	DECL	FRZ	YR	CONSRV
1	000135	C	RES NATURAL	100		PUD	0.00	0.00	1.00	LT		1.00	1.00	1.00	127,500.00	127,500.00	127,500							

REVIEW DATE 12/31/2019 BY NWA Total Acres: 0.00 Total Land Value: 127,500 Market: 0 Agricultural: 0 Common: 127,500 PRINTED 07/30/2025 BY SYS