LOT 225
NORTH HAMPTON PHASE 1 PB 6/215

MCGUINNES DAVID M & JULIET A L/E/
85589 BOSTICK WOOD DR
FERNANDINA BEACH, FL 32034

2025

12-2N-27-1460-0225-0000

NASSAU COUNTY PROPERTY

BUILDING CHARACTERISTICS

ELEMENT	CD	CONSTRUCTION
Exterior Wall	16	WD FR STUC 100
Roof Structur	08	IRREGULAR 100
Roof Cover	03	COMP SHNGL 100
Interior Wall	05	DRYWALL 100
Interior Floo	14	CARPET 70
Interior Floo	11	CLAY TILE 30
Air Condition	03	CENTRAL 100
Heating Type	04	AIR DUCTED 100
Bedrooms		5 100
Bathrooms		4 100
Frame	02	WOOD FRAME 100
Stories	1.5	1.5 100
Units		0 100
Occupancy	00	NONE 100
Quality	04	Quality Level 04
DOR CODE	0100	SINGLE FAMILY
MAP NUM		MKT AREA 04
NEIGHBORHOOD/LOC	4043.00	

AREA TYPE	TOTAL GROSS AREA	PCT OF BASE	YEAR	TOT ADJ AREA	SUBAREA MARKET VALUE
BAS	2,698	100	2006	2,698	344,069
FGR	704	55	2006	387	49,353
FOP	93	30	2006	28	3,571
FSP	514	40	2006	206	26,271
FST	83	55	2006	46	5,866
FUS	646	100	2006	646	82,382
TOTALS	4,738			4,011	511,513

MARKET ADJUSTMENTS

TYPE	MDL	EFF. AREA	TOT ADJ PTS	EFF. BASE RATE	REPL. COST NEW	AYB	EYB	ECON	FNCT		NORM	% COND
0900	01	4,011	106.1676	140.14	562,102	2006	2006	0	0	0	9.00	91.00

1 SNGL FAM – 100% - 2016 Heated Area: 3344 HX Base Yr 2016

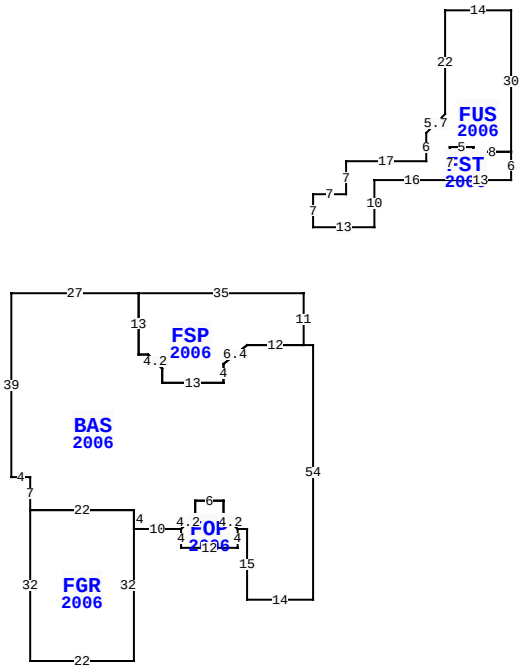

85589 BOSTICK WOOD DR, FERNANDINA BEACH

BLD DATE	03/29/2023	NW	LGL DATE
XF DATE			LAND DATE
INC DATE			AG DATE

VALUATION SUMMARY

VALUATION BY		STANDARD
Tax Group: 4	Tax Dist:	
BUILDING MARKET VALUE		511,513
TOTAL MARKET OB/XF VALUE		42,090
TOTAL LAND VALUE - MARKET		127,500
TOTAL MARKET VALUE		681,103
SOH/AGL Deduction		257,620
ASSESSED VALUE		423,483
TOTAL EXEMPTION VALUE	HX HB	50,722
BASE TAXABLE VALUE		372,761
TOTAL JUST VALUE		681,103
NCON VALUE		0
INCOME VALUE		
PREVIOUS YEAR MKT VALUE		658,984

PERMIT NUM	DESCRIPTION	AMT	ISSUED
B21060	SCRN ENCLOSURE	4,977	02/01/2008
B20921	SWIM POOL	48,800	01/01/2008
M10705	MECH OTHER	0	11/01/2005
E15554	ELEC OTHER	1,500	08/01/2005
P09931	OTHER	0	08/01/2005
C15667	CO ISSUED	440,400	07/01/2005

SALES DATA

OFF RECORD Number	DATE	TYPE INST	Q / U	V / I	RSN CD	SALE PRICE
2724/7	7/01/2024	LE	U	I	11	100
GRANTOR: MCGUINNES DAVID M & J						
GRANTEE: MCGUINNES LIAM P						
1996/0395	8/07/2015	WD	Q	I	02	430,000
GRANTOR: SHOUGH DENNA W & RAYM						
GRANTEE: MCGUINNES DAVID M &						

BUILDING NOTES

BUILDING DIMENSIONS

BAS=[YR=2006] W2 FSP=[YR=2006] N11 W35 S13 E2 D3 R3 S3 E13 N4 R5 U4 E12$ W12 D4 L5 S4 W13 N3 L3 U3 W2 N13 W27 S39 E4 S7 FGR=[YR=2006] S32 E22 N32 W22$ E22 S4 E10 FOP=[YR=2006] S4 E12 N4 L3 U3 N3 W6 S3 D3 L3 $ R3 U3 N3 E6 S3 D3 R3 E2 S15 E14 N54$ PTR=N25 FUS=[YR=2006] N7 E7 N7 E17 N6 R4 U4 N22 E14 S30 FST=[YR=2006] S6 W13 N7 E5 S1 E8$ W8 N1 W5 S7 W16 S10 W13$ S25$.

EXTRA FEATURES

LN	OB/XF CODE	DESCRIPTION	BLD	CAP	L	W	UNITS	UT	Adj R	ADJ UNIT PRICE	ORIG COND	YEAR ON	YEAR ACTUAL	Q	% COND	OB/XF MKT VALUE	NOTES
1	0504	FP-ELECTRI	0	100	0	0	1.00	UT	2,000.00	2,000.00	100	2006	2006	3	89	1,780	
2	0812	CONCRETE C	0	100	0	0	2,030.00	SF	4.00	4.00	100	2006	2006	3	86	6,983	
3	0861	POOL GUNIT	0	100	0	0	416.00	SF	85.00	85.00	100	2008	2008	3	48	16,973	
4	0910	SCRN RM L	0	100	0	0	1,035.00	SF	15.00	15.00	100	2008	2008	3	31	4,813	
5	0855	CONC PAVER	0	100	0	0	1,241.00	SF	10.00	10.00	100	2008	2008	3	88	10,921	
6	0871	POOL HTR R	0	100	0	0	1.00	UT	2,000.00	2,000.00	100	2008	2008	3	31	620	

LAND DESCRIPTION

TOTAL OB/XF 42,090

LN	USE CODE	CLS	LAND USE DESCRIPTION	CAP	RD	LOC ZONE	FRONT	DEPTH	TOT LND UTS	UNIT TYPE	DT	DPTH FACT	% COND	TOT ADJ	UNIT PRICE	ADJ UNIT PRICE	LAND VALUE	OTHER ADJUSTMENTS AND NOTES	YEAR	DENSITY	DECL	FRZ	YR	CONSRV
1	000135	C	RES NATURAL	100		PUD	0.00	0.00	1.00	LT		1.00	1.00	1.00	127,500.00	127,500.00	127,500							

REVIEW DATE 11/22/2019 BY TWA Total Acres: 0.00 Total Land Value: 127,500 Market: 0 Agricultural: 0 Common: 127,500 PRINTED 07/30/2025 BY SYS