LOT 222
NORTH HAMPTON PHASE 1 PB 6/215

BEIRNES LYNETTE PAIGE & PAUL MITCHELL
86056 SHELTER ISLAND DR
FERNANDINA BEACH, FL 32034

2025

12-2N-27-1460-0222-0000

BUILDING CHARACTERISTICS

ELEMENT	CD	CONSTRUCTION
Exterior Wall	16	WD FR STUC 90
Exterior Wall	21	STONE 10
Roof Structur	08	IRREGULAR 100
Roof Cover	03	COMP SHNGL 100
Interior Wall	05	DRYWALL 100
Interior Floo	11	CLAY TILE 60
Interior Floo	14	CARPET 40
Air Condition	03	CENTRAL 100
Heating Type	04	AIR DUCTED 100
Bedrooms		5 100
Bathrooms		4 100
Frame	02	WOOD FRAME 100
Stories	1.5	1.5 100
Units		0 100
Occupancy	00	NONE 100
Quality	04	Quality Level 04
DOR CODE	0100	SINGLE FAMILY
MAP NUM		MKT AREA 04
NEIGHBORHOOD/LOC	4043.00	

AREA TYPE	TOTAL GROSS AREA	PCT OF BASE	YEAR	TOT ADJ AREA	SUBAREA MARKET VALUE
BAS	2,377	100	2004	2,377	329,260
DCK	356	10	2021	36	4,987
FGR	786	55	2004	432	59,840
FOP	162	30	2004	49	6,788
FSP	256	40	2004	102	14,129
FUS	432	100	2004	432	59,840
PTO	12	5	2004	1	139
PTO	140	5	2022	7	969
TOTALS	4,521			3,436	475,952

MARKET ADJUSTMENTS

TYPE	MDL	EFF. AREA	TOT ADJ PTS	EFF. BASE RATE	REPL. COST NEW	AYB	EYB	ECON	FNCT		NORM	% COND
0900	01	3,436	116.5962	153.91	528,835	2004	2004	0	0	0	10.00	90.00

1 SNGL FAM – 100% - 2025 Heated Area: 2809 HX Base Yr 2025

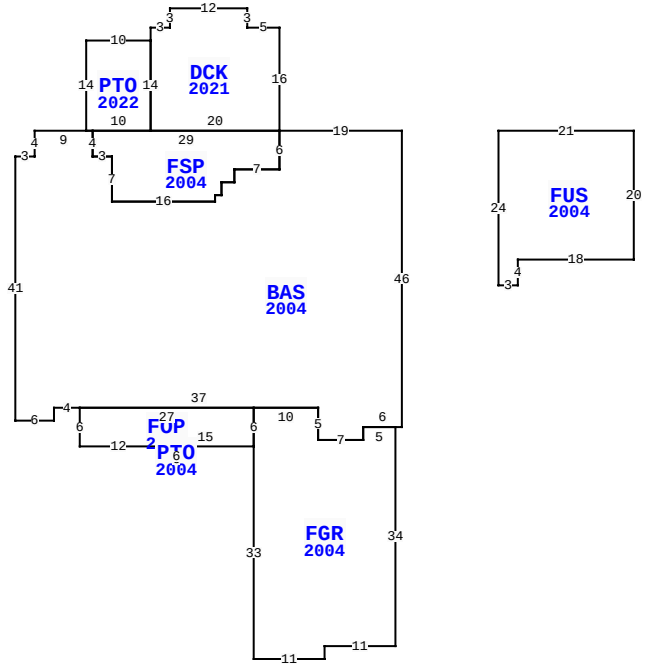

86056 SHELTER ISLAND DR, FERNANDINA BEACH

BLD DATE	03/29/2023	NW	LGL DATE
XF DATE			LAND DATE
INC DATE			AG DATE

NASSAU COUNTY PROPERTY

PAGE 1 of 1 4

VALUATION SUMMARY

VALUATION BY		STANDARD
Tax Group: 4	Tax Dist:	
BUILDING MARKET VALUE		475,952
TOTAL MARKET OB/XF VALUE		16,865
TOTAL LAND VALUE - MARKET		127,500
TOTAL MARKET VALUE		620,317
SOH/AGL Deduction		311,709
ASSESSED VALUE		308,608
TOTAL EXEMPTION VALUE	HX HB	50,722
BASE TAXABLE VALUE		257,886
TOTAL JUST VALUE		620,317
NCON VALUE		0
INCOME VALUE		
PREVIOUS YEAR MKT VALUE		610,684

PERMIT NUM	DESCRIPTION	AMT	ISSUED
22002631	ADDITION	5,396	02/16/2022
21004534	ADDITION	7,808	04/13/2021
20007827	REPAIR/RRF	25,789	08/27/2020

SALES DATA

OFF RECORD Number	DATE	TYPE INST	Q / U	V / I	RSN CD	SALE PRICE
2707/342	4/18/2024	WD	Q	I	01	663,500
GRANTOR: KOVATS LIVING TRUST						
GRANTEE: BEIRNES LYNETTE PAI						
2451/1735	4/08/2021	WD	U	I	11	100
GRANTOR: KOVATS WALTER A & FRA						
GRANTEE: KOVATS LIVING TRUST						

BUILDING NOTES

BUILDING DIMENSIONS

BAS=[YR=2004] W19 DCK=[YR=2021] N16 W5 N3 W12 S3 W3 S2 PTO=[YR=2022] W10 S14 E10 N14$S14 E20$ FSP=[YR=2004] W29 S4 E3 S7 E16 N1 E1 N2 E2 N2 E7 N6$ S6 W7 S2 W2 S2 W1 S1W16 N7 W3 N4 W9 S4 W3 S41 E6 N2 E4 FOP=[YR=2004] S6 E12 PTO=[YR=2004] S2 E6 N2 W6 $ E15 FGR=[YR=2004] S33 E11 N2 E11 N34 W5 S2 W7 N5 W10S6 $ N6 W27 $ E37 S5 E7 N2 E6 N46$ PTR= E15 FUS=[YR=2004] E21 S20W18 S4 W3 N24 $ W15 $.

EXTRA FEATURES

L N	OB/XF CODE	DESCRIPTION	BLD	CAP	L	W	UNITS	UT	Adj R	ADJ UNIT PRICE	ORIG COND	YEAR ON	YEAR ACTUAL	Q	% COND	OB/XF MKT VALUE	NOTES
1	0500	FP-PRE FAB	0	100	0	0	1.00	UT	3,500.00	3,500.00	100	2004	2004	3	87	3,045	
2	0812	CONCRETE C	0	100	0	0	1,716.00	SF	4.00	4.00	100	2004	2004	3	83	5,697	
3	0462	ST/AL FNC	0	100	0	0	896.00	SF	10.00	10.00	100	2011	2011	3	60	5,376	
4	0463	FENCE GATE	0	100	0	0	2.00	UT	300.00	300.00	100	2011	2011	3	78	468	
5	0911	SCRN RM A	0	100	14	10	140.00	SF	17.50	17.50	100	2022	2022	3	93	2,279	

LAND DESCRIPTION

TOTAL OB/XF 16,865

L N	USE CODE	CLS	LAND USE DESCRIPTION	CAP	R D	LOC ZONE	FRONT	DEPTH	TOT LND UTS	UNIT TYPE	D T	DPTH FACT	% COND	TOT ADJ	UNIT PRICE	ADJ UNIT PRICE	LAND VALUE	OTHER ADJUSTMENTS AND NOTES	YEAR	DENSITY	DECL	FRZ	YR	CONSRV
1	000135	C	RES NATURAL	100		PUD	0.00	0.00	1.00	LT		1.00	1.00	1.00	127,500.00	127,500.00	127,500							

REVIEW DATE 03/14/2022 BY DJ Total Acres: 0.00 Total Land Value: 127,500 Market: 0 Agricultural: 0 Common: 127,500 PRINTED 07/30/2025 BY SYS