LOT 217
IN OR 1387/133
NORTH HAMPTON PHASE 1 PB 6/215

SANDS RONALD G & DARLA M
86136 SHELTER ISLAND DRIVE
FERNANDINA BEACH, FL 32034

2025

12-2N-27-1460-0217-0000

BUILDING CHARACTERISTICS

ELEMENT	CD	CONSTRUCTION
Exterior Wall	10	ABOVE AVG 90
Exterior Wall	21	STONE 10
Roof Structur	08	IRREGULAR 100
Roof Cover	03	COMP SHNGL 100
Interior Wall	05	DRYWALL 100
Interior Floo	11	CLAY TILE 100
Air Condition	03	CENTRAL 100
Heating Type	04	AIR DUCTED 100
Bedrooms		5 100
Bathrooms		4 100
Frame	02	WOOD FRAME 100
Stories	1.5	1.5 100
Units		0 100
Occupancy	00	NONE 100
Quality	04	Quality Level 04
DOR CODE	0100	SINGLE FAMILY
MAP NUM		MKT AREA 04
NEIGHBORHOOD/LOC	4043.00	

AREA TYPE	TOTAL GROSS AREA	PCT OF BASE	YEAR	TOT ADJ AREA	SUBAREA MARKET VALUE
BAS	2,415	100	2005	2,415	362,309
FGR	614	55	2005	338	50,709
FOP	162	30	2005	49	7,351
FSP	245	40	2005	98	14,702
FUS	402	100	2005	402	60,310
PTO	373	5	2016	19	2,850
TOTALS	4,211			3,321	498,231

MARKET ADJUSTMENTS

TYPE	MDL	EFF. AREA	TOT ADJ PTS	EFF. BASE RATE	REPL. COST NEW	AYB	EYB	ECON	FNCT		NORM	% COND
0900	01	3,321	121.6194	160.54	533,153	2005	2010	0	0	0	6.55	93.45

1 SNGL FAM – 100% - 2007 Heated Area: 2817 HX Base Yr 2007

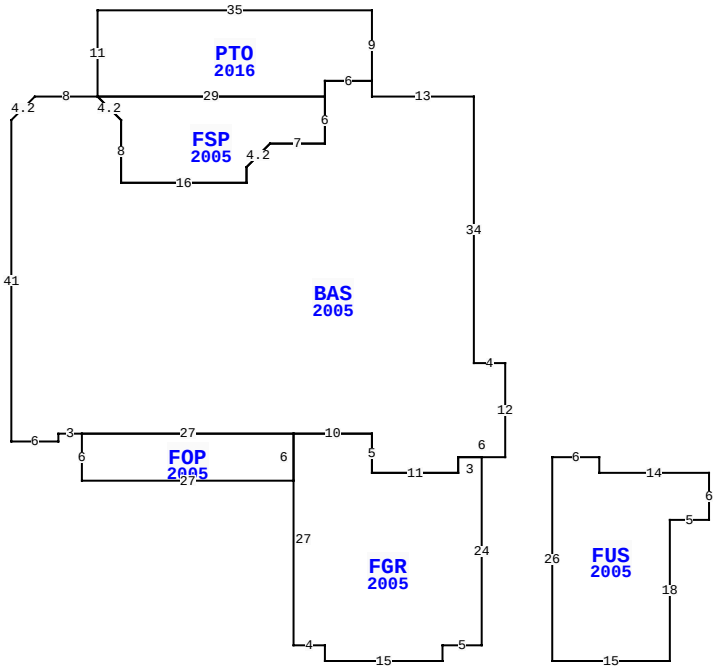

BLD DATE	03/29/2023	NW	LGL DATE
XF DATE			LAND DATE
INC DATE			AG DATE

86136 SHELTER ISLAND DR, FERNANDINA BEACH

NASSAU COUNTY PROPERTY

PAGE 1 of 1 4

VALUATION SUMMARY

VALUATION BY		STANDARD
Tax Group: 4	Tax Dist:	
BUILDING MARKET VALUE		498,231
TOTAL MARKET OB/XF VALUE		7,650
TOTAL LAND VALUE - MARKET		127,500
TOTAL MARKET VALUE		633,381
SOH/AGL Deduction		264,174
ASSESSED VALUE		369,207
TOTAL EXEMPTION VALUE	HX HB	50,722
BASE TAXABLE VALUE		318,485
TOTAL JUST VALUE		633,381
NCON VALUE		0
INCOME VALUE		
PREVIOUS YEAR MKT VALUE		609,607

PERMIT NUM	DESCRIPTION	AMT	ISSUED
20007811	REPAIR/RRF	0	09/17/2020
B0515459	NEW CONSTR	463,202	01/18/2006
M10297	MECH OTHER	0	09/01/2005
E15266	ELEC OTHER	1,500	07/01/2005
P09750	OTHER	0	07/01/2005
R0507792	REPAIR/RRF	3,500	06/01/2005

SALES DATA

OFF RECORD Number	DATE	TYPE INST	Q U	V I	RSN CD	SALE PRICE
1387/0133	2/06/2006	WD	Q	I		613,100
GRANTOR: INTERVEST CONSTRUCTIO						
GRANTEE: SANDS RONALD G & DA						
1291/0360	1/27/2005	WD	U	V	19	1,425,900
GRANTOR: NORTH HAMPTON LLC						
GRANTEE: INTERVEST CONSTRUCT						

BUILDING NOTES

BUILDING DIMENSIONS

BAS=[YR=2005] W13 N2PTO=[YR=2016] N9 W35 S11 E29 N2 E6$ W6 S2FSP=[YR=2005] W29 D3 R3 S8 E16 N2 U3 R3 E7 N6$ S6 W7 L3 D3 S2 W16 N8 U3 L3 W8 D3 L3 S41 E6 N1E3 FOP=[YR=2005] S6 E27 N6 W27$ E27 FGR=[YR=2005] S27 E4 S2 E15 N2 E5 N24 W3 S2 W11 N5 W10$ E10 S5 E11 N2 E6 N12 W4 N34$ PTR= E10 S46 FUS=[YR=2005] S26 E15 N18 E5N6 W14 N2 W6$ N46 W10$.

EXTRA FEATURES

LN	OB/XF CODE	DESCRIPTION	BLD	CAP	L	W	UNITS	UT	Adj R	ADJ UNIT PRICE	ORIG COND	YEAR ON	YEAR ACTUAL	Q	% COND	OB/XF MKT VALUE	NOTES
1	0500	FP-PRE FAB	0	100	0	0	1.00	UT	3,500.00	3,500.00	100	2005	2005	3	88	3,080	
2	0812	CONCRETE C	0	100	0	0	1,360.00	SF	4.00	4.00	100	2005	2005	3	84	4,570	

LAND DESCRIPTION

TOTAL OB/XF 7,650

LN	USE CODE	CLS	LAND USE DESCRIPTION	CAP	RD	LOC ZONE	FRONT	DEPTH	TOT LND UTS	UNIT TYPE	DT	DPTH FACT	% COND	TOT ADJ	UNIT PRICE	ADJ UNIT PRICE	LAND VALUE	OTHER ADJUSTMENTS AND NOTES	YEAR	DENSITY	DECL	FRZ	YR	CONSRV
1	000135	C	RES NATURAL	100		PUD	0.00	0.00	1.00	LT		1.00	1.00	1.00	127,500.00	127,500.00	127,500							

REVIEW DATE 11/20/2020 BY NWX Total Acres: 0.00 Total Land Value: 127,500 Market: 0 Agricultural: 0 Common: 127,500 PRINTED 07/30/2025 BY SYS