LOT 213
NORTH HAMPTON PHASE 1 PB 6/215

KING RAYMOND E
86163 SHELTER ISLAND DRIVE
FERNANDINA BEACH, FL 32034

2025

12-2N-27-1460-0213-0000

NASSAU COUNTY PROPERTY

BUILDING CHARACTERISTICS

ELEMENT	CD	CONSTRUCTION
Exterior Wall	16	WD FR STUC 90
Exterior Wall	21	STONE 10
Roof Structur	08	IRREGULAR 100
Roof Cover	03	COMP SHNGL 100
Interior Wall	05	DRYWALL 100
Interior Floo	14	CARPET 70
Interior Floo	11	CLAY TILE 30
Air Condition	03	CENTRAL 100
Heating Type	04	AIR DUCTED 100
Bedrooms		5 100
Bathrooms		4 100
Frame	02	WOOD FRAME 100
Stories	2.	2. 100
Units		0 100
Occupancy	00	NONE 100
Quality	04	Quality Level 04
DOR CODE	0100	SINGLE FAMILY
MAP NUM		MKT AREA 04
NEIGHBORHOOD/LOC	4043.00	

AREA TYPE	TOTAL GROSS AREA	PCT OF BASE	YEAR	TOT ADJ AREA	SUBAREA MARKET VALUE
BAS	2,644	100	2003	2,644	352,425
FGR	460	55	2003	253	33,723
FOP	50	30	2003	15	1,999
FOP	325	30	2003	98	13,063
FUS	272	100	2003	272	36,256
PTO	194	5	2024	10	1,333
TOTALS	3,945			3,292	438,799

MARKET ADJUSTMENTS

TYPE	MDL	EFF. AREA	TOT ADJ PTS	EFF. BASE RATE	REPL. COST NEW	AYB	EYB	ECON	FNCT		NORM	% COND
0900	01	3,292	112.8288	148.93	490,278	2003	2003	0	0	0	10.50	89.50

1 SNGL FAM – 100% - 2024 Heated Area: 2916 HX Base Yr 2024

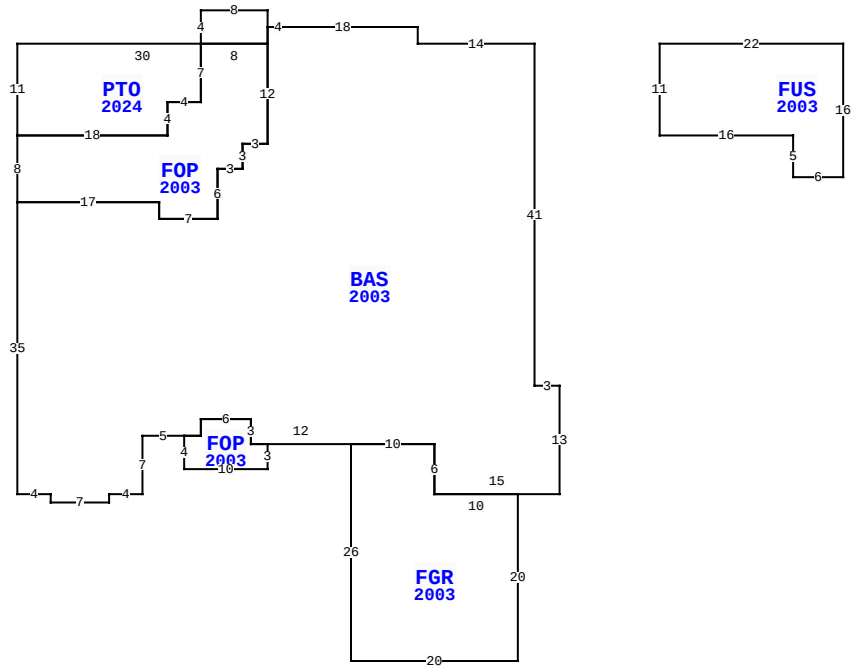

86163 SHELTER ISLAND DR, FERNANDINA BEACH

BLD DATE		LGL DATE	
XF DATE		LAND DATE	
INC DATE		AG DATE	

VALUATION SUMMARY

VALUATION BY		STANDARD
Tax Group: 4	Tax Dist:	
BUILDING MARKET VALUE		438,799
TOTAL MARKET OB/XF VALUE		11,497
TOTAL LAND VALUE - MARKET		127,500
TOTAL MARKET VALUE		577,796
SOH/AGL Deduction		4,559
ASSESSED VALUE		573,237
TOTAL EXEMPTION VALUE	HX HB	50,722
BASE TAXABLE VALUE		522,515
TOTAL JUST VALUE		577,796
NCON VALUE		0
INCOME VALUE		
PREVIOUS YEAR MKT VALUE		557,082

PERMIT NUM	DESCRIPTION	AMT	ISSUED
230009160	11X21.5 SCRN ROOM	7,844	07/18/2023
B0209908	NEW CONSTR	211,303	07/01/2002

SALES DATA

OFF RECORD Number	DATE	TYPE INST	Q U	V I	RSN CD	SALE PRICE
2625/0552	3/09/2023	WD	Q	I	01	636,000
GRANTOR: RICHARDS CHARLES L &						
GRANTEE: KING RAYMOND E						
1523/0270	9/05/2007	WD	Q	I	01	100
GRANTOR: RICHARDS CHARLES L &						
GRANTEE: RICHARDS CHARLES L						

BUILDING NOTES

EXTRA FEATURES

LN	OB/XF CODE	DESCRIPTION	BLD	CAP	L	W	UNITS	UT	Adj R	ADJ UNIT PRICE	ORIG COND	YEAR ON	YEAR ACTUAL	Q	% COND	OB/XF MKT VALUE	NOTES
1	0500	FP-PRE FAB	0	100	0	0	1.00	UT	3,500.00	3,500.00	100	2003	2003	3	86	3,010	
2	0812	CONCRETE C	0	100	0	0	1,418.00	SF	4.00	4.00	100	2003	2003	3	82	4,651	
3	0911	SCRN RM A	0	100	0	0	226.00	SF	17.50	17.50	100	2024	2023		97	3,836	

BUILDING DIMENSIONS

BAS=[YR=2003;ORIG=0,0] W14 N2 W18 S2 S12 W3 S3 W3 S6 W7 N2 W17 S35 E4 S1 E7 N1 E4 N7 E5 E2 N2 E6 S3 E12 E10 S6 E15 N13 W3 N41 $
FGR=[YR=2003;ORIG=-22,48] S26 E20 N20 W10 N6 W10 $
FOP=[YR=2003;ORIG=-32,0] W8 S7 W4 S4 W18 S8 E17 S2 E7 N6 E3 N3 E3 N12 $
FUS=[YR=2003;ORIG=15,0] E22 S16 W6 N5 W16 N11 $
FOP=[YR=2003;ORIG=-42,47] S4 E10 N3 W2 N3 W6 S2 W2 $
PTR=[ORIG=0,0] E15 W15 $
PTO=[YR=2024;ORIG=-62,11] E18 N4 E4 N7 N4 E8 S4 W30 S11 $
.

LAND DESCRIPTION

TOTAL OB/XF 11,497

LN	USE CODE	CLS	LAND USE DESCRIPTION	CAP	RD	LOC ZONE	FRONT	DEPTH	TOT LND UTS	UNIT TYPE	DT	DPTH FACT	% COND	TOT ADJ	UNIT PRICE	ADJ UNIT PRICE	LAND VALUE	OTHER ADJUSTMENTS AND NOTES	YEAR	DENSITY	DECL	FRZ	YR	CONSRV
1	000135	C	RES NATURAL	100		PUD	0.00	0.00	1.00	LT		1.00	1.00	1.00	127,500.00	127,500.00	127,500							

REVIEW DATE 04/30/2024 BY KBA Total Acres: 0.00 Total Land Value: 127,500 Market: 0 Agricultural: 0 Common: 127,500 PRINTED 07/30/2025 BY SYS