LOT 156
NORTH HAMPTON PHASE 1 PB 6/215

DOOLEY WESLEY TROY & SHEA
86511 N HAMPTON CLUB WAY
FERNANDINA BEACH, FL 32034

2025

12-2N-27-1460-0156-0000

NASSAU COUNTY PROPERTY

BUILDING CHARACTERISTICS

ELEMENT	CD	CONSTRUCTION
Exterior Wall	16	WD FR STUC 90
Exterior Wall	21	STONE 10
Roof Structur	08	IRREGULAR 100
Roof Cover	03	COMP SHNGL 100
Interior Wall	05	DRYWALL 100
Interior Floo	14	CARPET 70
Interior Floo	11	CLAY TILE 30
Air Condition	03	CENTRAL 100
Heating Type	04	AIR DUCTED 100
Bedrooms		5 100
Bathrooms		4 100
Frame	02	WOOD FRAME 100
Stories	1.5	1.5 100
Units		0 100
Occupancy	00	NONE 100
Quality	04	Quality Level 04
DOR CODE	0100	SINGLE FAMILY
MAP NUM		MKT AREA 04
NEIGHBORHOOD/LOC	4043.00	

AREA TYPE	TOTAL GROSS AREA	PCT OF BASE	YEAR	TOT ADJ AREA	SUBAREA MARKET VALUE
BAS	3,016	100	2002	3,016	394,273
FGR	490	55	2002	270	35,297
FOP	18	30	2002	5	653
FOP	180	30	2002	54	7,059
FSP	266	40	2002	106	13,857
FUS	378	100	2002	378	49,415
PTO	92	5	2002	5	653
TOTALS	4,440			3,834	501,208

MARKET ADJUSTMENTS

TYPE	MDL	EFF. AREA	TOT ADJ PTS	EFF. BASE RATE	REPL. COST NEW	AYB	EYB	ECON	FNCT		NORM	% COND
0900	01	3,834	109.4310	144.45	553,821	2002	2005	0	0	0	9.50	90.50

1 SNGL FAM – 100% - 2022 Heated Area: 3394 HX Base Yr 2022

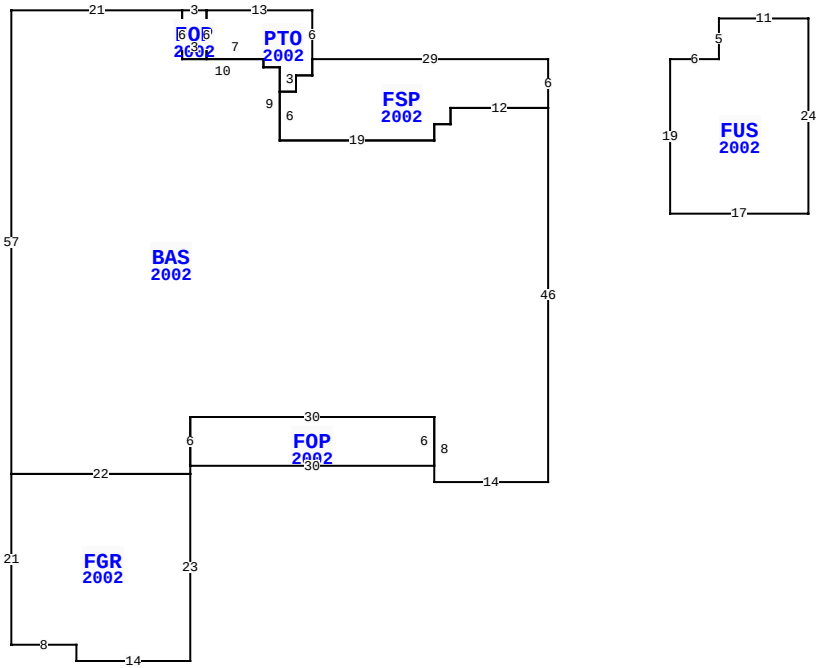

86511 NORTH HAMPTON CLUB WAY, FERNANDINA BEACH

BLD DATE	03/29/2023	NW	LGL DATE
XF DATE			LAND DATE
INC DATE			AG DATE

VALUATION SUMMARY

VALUATION BY		STANDARD
Tax Group: 4	Tax Dist:	
BUILDING MARKET VALUE		501,208
TOTAL MARKET OB/XF VALUE		9,207
TOTAL LAND VALUE - MARKET		85,000
TOTAL MARKET VALUE		595,415
SOH/AGL Deduction		103,544
ASSESSED VALUE		491,871
TOTAL EXEMPTION VALUE	HX HB	50,722
BASE TAXABLE VALUE		441,149
TOTAL JUST VALUE		595,415
NCON VALUE		0
INCOME VALUE		
PREVIOUS YEAR MKT VALUE		571,887

PERMIT NUM	DESCRIPTION	AMT	ISSUED
B25866	XFOB	0	03/01/2012

SALES DATA

OFF RECORD Number	DATE	TYPE INST	Q U	V I	RSN CD	SALE PRICE
2435/0136	2/17/2021	WD	Q	I	01	457,500
GRANTOR: LINARES EDNORA G & RO						
GRANTEE: DOOLEY WESLEY TROY						
1963/0067	2/12/2015	WD	Q	I	02	400,000
GRANTOR: TRESKA YVONNE						
GRANTEE: LINARES EDNORA G &						

BUILDING NOTES

BUILDING DIMENSIONS

FSP=[YR=2002] W29 PTO=[YR=2002] N6 W13 FOP=[YR=2002] W3 BAS=[YR=2002] W21 S57 FGR=[YR=2002] S21 E8 S2 E14 N23 W22 $ E22 N1 FOP=[YR=2002] E30 N6 W30 S6 $ N6 E30 S8 E14 N46 W12 S2 W2 S2 W19 N9 W2 N1 W10 N6 $ S6 E3 N6 $ S6 E7 S1 E2 S3 E2 N2 E2 N2 $ S2 W2 S2 W2 S6 E19 N2 E2 N2 E12 N6 $ PTR= E15 FUS=[YR=2002] E6 N5 E11 S24 W17 N19 $ W15 $.

EXTRA FEATURES

LN	OB/XF CODE	DESCRIPTION	BLD	CAP	L	W	UNITS	UT	Adj R	ADJ UNIT PRICE	ORIG COND	YEAR ON	YEAR ACTUAL	Q	% COND	OB/XF MKT VALUE	NOTES
1	0500	FP-PRE FAB	0	100	0	0	1.00	UT	3,500.00	3,500.00	100	2002	2002	3	85	2,975	
2	0812	CONCRETE C	0	100	0	0	1,137.00	SF	4.00	4.00	100	2002	2002	3	80	3,638	
3	0462	ST/AL FNC	0	100	0	0	720.00	SF	10.00	10.00	100	2004	2004	3	32	2,304	
4	0910	SCRN RM L	0	100	0	0	92.00	SF	15.00	15.00	100	2004	2004	3	21	290	

LAND DESCRIPTION

TOTAL OB/XF 9,207

LN	USE CODE	CLS	LAND USE DESCRIPTION	CAP	RD	LOC ZONE	FRONT	DEPTH	TOT LND UTS	UNIT TYPE	DT	DPTH FACT	% COND	TOT ADJ	UNIT PRICE	ADJ UNIT PRICE	LAND VALUE	OTHER ADJUSTMENTS AND NOTES	YEAR	DENSITY	DECL	FRZ	YR	CONSRV
1	000100	C	RES	100	0003	PUD	0.00	0.00	1.00	LT		1.00	1.00	1.00	85,000.00	85,000.00	85,000							

REVIEW DATE 04/06/2021 BY NWA Total Acres: 0.00 Total Land Value: 85,000 Market: 0 Agricultural: 0 Common: 85,000 PRINTED 07/30/2025 BY SYS