LOT 148
NORTH HAMPTON PHASE 1 PB 6/215

BATYE AUSTIN M & ALEXANDRA ELYSE
96082 ROXABOGUE DR
FERNANDINA BEACH, FL 32034

2025

12-2N-27-1460-0148-0000

BUILDING CHARACTERISTICS

ELEMENT	CD	CONSTRUCTION
Exterior Wall	16	WD FR STUC 100
Roof Structur	08	IRREGULAR 100
Roof Cover	03	COMP SHNGL 100
Interior Wall	05	DRYWALL 100
Interior Floo	13	LVT/LAMNT 60
Interior Floo	11	CLAY TILE 40
Air Condition	03	CENTRAL 100
Heating Type	04	AIR DUCTED 100
Bedrooms		4 100
Bathrooms		2 100
Frame	02	WOOD FRAME 100
Stories	1.	1. 100
Units		0 100
Occupancy	00	NONE 100
Quality	04	Quality Level 04
DOR CODE	0100	SINGLE FAMILY
MAP NUM		MKT AREA 04
NEIGHBORHOOD/LOC	4043.00	

AREA TYPE	TOTAL GROSS AREA	PCT OF BASE	YEAR	TOT ADJ AREA	SUBAREA MARKET VALUE
BAS	2,371	100	2003	2,371	313,511
FOP	72	30	2003	22	2,909
FSP	260	40	2003	104	13,752
SFB	477	80	2003	382	50,511
TOTALS	3,180			2,879	380,682

MARKET ADJUSTMENTS

TYPE	MDL	EFF. AREA	TOT ADJ PTS	EFF. BASE RATE	REPL. COST NEW	AYB	EYB	ECON	FNCT		NORM	% COND
0900	01	2,879	111.9258	147.74	425,343	2003	2003	0	0	0	10.50	89.50

1 SNGL FAM – 100% - 2023 Heated Area: 2753 HX Base Yr 2023

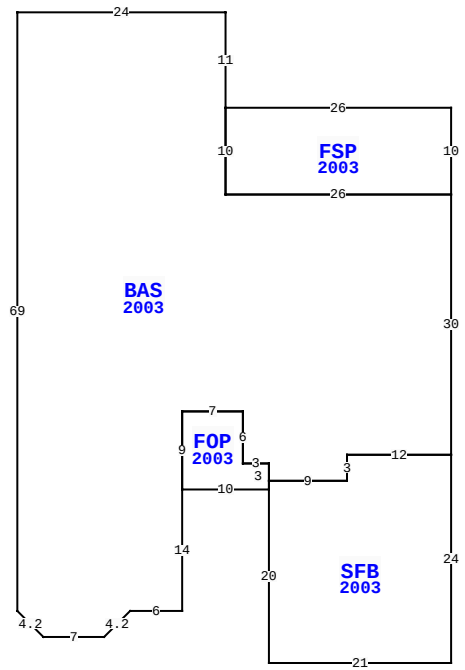

BLD DATE	03/29/2023	NW	LGL DATE
XF DATE			LAND DATE
INC DATE			AG DATE

96082 ROXABOGUE DR, FERNANDINA BEACH

NASSAU COUNTY PROPERTY

PAGE 1 of 1 4

VALUATION SUMMARY

VALUATION BY		STANDARD
Tax Group: 4	Tax Dist:	
BUILDING MARKET VALUE		380,682
TOTAL MARKET OB/XF VALUE		19,410
TOTAL LAND VALUE - MARKET		85,000
TOTAL MARKET VALUE		485,092
SOH/AGL Deduction		5,004
ASSESSED VALUE		480,088
TOTAL EXEMPTION VALUE	HX HB VX	55,722
BASE TAXABLE VALUE		424,366
TOTAL JUST VALUE		485,092
NCON VALUE		0
INCOME VALUE		
PREVIOUS YEAR MKT VALUE		467,911

PERMIT NUM	DESCRIPTION	AMT	ISSUED
B0311047	XFOB	10,500	04/01/2003
B0310693	SWIM POOL	17,034	01/01/2003
B0210234	NEW CONSTR	181,990	09/01/2002

SALES DATA

OFF RECORD Number	DATE	TYPE INST	Q / U	V / I	RSN CD	SALE PRICE
2583/0648	8/08/2022	WD	Q	I	02	625,000
GRANTOR: RICE DEAN L & WENDY A						
GRANTEE: BATYE AUSTIN MATTHE						
2216/0972	8/03/2018	WD	Q	I	02	350,000
GRANTOR: SIMPSON MARK						
GRANTEE: RICE DEAN L & WENDY						

BUILDING NOTES

BUILDING DIMENSIONS

BAS=[YR=2003;ORIG=-26,0] N11 W24 S69 D3R3 E7 U3R3 E6 N14 N9 E7 S6 E3 S2 E9 N3 E12 N30 W26 N10 $
SFB=[YR=2003;ORIG=-21,44] S20 E21 N24 W12 S3 W9 S1 $
FSP=[YR=2003;ORIG=0,0] W26 S10 E26 N10 $
FOP=[YR=2003;ORIG=-31,44] E10 N3 W3 N6 W7 S9 $
.

EXTRA FEATURES

LN	OB/XF CODE	DESCRIPTION	BLD	CAP	L	W	UNITS	UT	Adj R	ADJ UNIT PRICE	ORIG COND	YEAR ON	YEAR ACTUAL	Q	% COND	OB/XF MKT VALUE	NOTES
1	0810	CONCRETE A	0	100	0	0	706.00	SF	6.50	6.50	100	2003	2003	3	82	3,763	
2	0861	POOL GUNIT	0	100	0	0	312.00	SF	85.00	85.00	100	2003	2003	3	29	7,691	
3	0910	SCRN RM L	0	100	0	0	729.00	SF	15.00	15.00	100	2003	2003	3	20	2,187	
4	0845	KOOL DECK	0	100	0	0	417.00	SF	7.25	7.25	100	2003	2003	3	82	2,479	
5	0500	FP-PRE FAB	0	100	0	0	1.00	UT	3,500.00	3,500.00	100	2011	2011	3	94	3,290	

LAND DESCRIPTION

TOTAL OB/XF 19,410

LN	USE CODE	CLS	LAND USE DESCRIPTION	CAP	RD	LOC ZONE	FRONT	DEPTH	TOT LND UTS	UNIT TYPE	DT	DPTH FACT	% COND	TOT ADJ	UNIT PRICE	ADJ UNIT PRICE	LAND VALUE	OTHER ADJUSTMENTS AND NOTES	YEAR	DENSITY	DECL	FRZ	YR	CONSRV
1	000100	C	RES	100		PUD	0.00	0.00	1.00	LT		1.00	1.00	1.00	85,000.00	85,000.00	85,000							

REVIEW DATE 01/06/2023 BY NWA Total Acres: 0.00 Total Land Value: 85,000 Market: 0 Agricultural: 0 Common: 85,000 PRINTED 07/30/2025 BY SYS