LOT 80
PLUMMER CREEK PHASE TWO C & D
OR 2223/684

BOISVERT RUBIE & RICHARD JOHN
79218 PLUMMERS CREEK DR
YULEE, FL 32097

2025

12-2N-26-1604-0080-0000

BUILDING CHARACTERISTICS

ELEMENT	CD	CONSTRUCTION
Exterior Wall	10	ABOVE AVG 100
Roof Structur	03	GABLE/HIP 100
Roof Cover	03	COMP SHNGL 100
Interior Wall	05	DRYWALL 100
Interior Floo	11	CLAY TILE 70
Interior Floo	14	CARPET 30
Air Condition	03	CENTRAL 100
Heating Type	04	AIR DUCTED 100
Bedrooms		3 100
Bathrooms		2 100
Frame	02	WOOD FRAME 100
Stories	1.	1. 100
Units		0 100
Occupancy	00	NONE 100
Quality	04	Quality Level 04
DOR CODE	0100	SINGLE FAMILY
MAP NUM		MKT AREA 05
NEIGHBORHOOD/LOC	5015.00	

AREA TYPE	TOTAL GROSS AREA	PCT OF BASE	YEAR	TOT ADJ AREA	SUBAREA MARKET VALUE
BAS	1,752	100	2019	1,752	208,645
FGR	460	55	2019	253	30,130
FOP	42	30	2019	13	1,548
FOP	102	30	2019	31	3,692
PTO	143	5	2019	7	834
TOTALS	2,499			2,056	244,848

MARKET ADJUSTMENTS

TYPE	MDL	EFF. AREA	TOT ADJ PTS	EFF. BASE RATE	REPL. COST NEW	AYB	EYB	ECON	FNCT		NORM	% COND
0100	01	2,056	121.5249	121.52	249,845	2019	2019	0	0	0	2.00	98.00

1 SINGLE FAM – 100% - 2025 Heated Area: 1752 HX Base Yr 2025

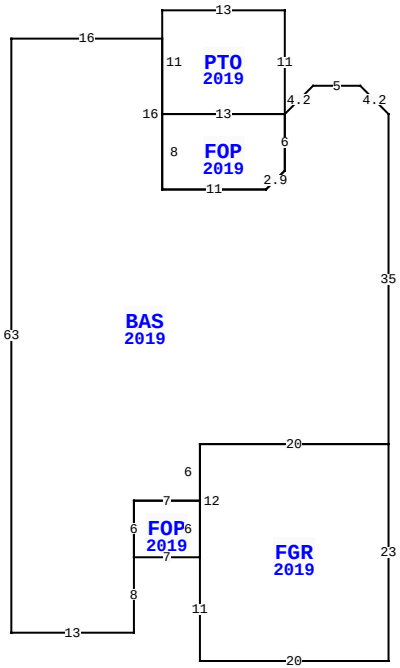

79218 PLUMMERS CREEK DR, YULEE

BLD DATE		LGL DATE	
XF DATE		LAND DATE	04/04/2025 MLU
INC DATE		AG DATE	

NASSAU COUNTY PROPERTY

PAGE 1 of 1 4

VALUATION SUMMARY

VALUATION BY		STANDARD
Tax Group: 4	Tax Dist:	
BUILDING MARKET VALUE		244,848
TOTAL MARKET OB/XF VALUE		4,445
TOTAL LAND VALUE - MARKET		60,000
TOTAL MARKET VALUE		309,293
SOH/AGL Deduction		0
ASSESSED VALUE		309,293
TOTAL EXEMPTION VALUE	HX HB VX	55,722
BASE TAXABLE VALUE		253,571
TOTAL JUST VALUE		309,293
NCON VALUE		0
INCOME VALUE		
PREVIOUS YEAR MKT VALUE		293,296

PERMIT NUM	DESCRIPTION	AMT	ISSUED
19010146	CO ISSUED	0	09/26/2019
19004512	NEW CONSTR	242,023	05/01/2019

SALES DATA

OFF RECORD Number	DATE	TYPE INST	Q / U	V / I	RSN CD	SALE PRICE
2741/1630	9/24/2024	WD	Q	I	01	389,000
GRANTOR: MURRELL SANDRA M						
GRANTEE: BOISVERT RUBIE & RI						
2310/0633	9/25/2019	WD	Q	I	02	259,700
GRANTOR: DREAM FINDERS HOMES L						
GRANTEE: MURRELL SANDRA M						

BUILDING NOTES

BUILDING DIMENSIONS

BAS=[YR=2019] U3 L3 W5 D3 L3 PTO=[YR=2019] N11 W13 S11 FOP=[YR=2019] S8 E11 U2 R2 N6 W13$ E13$S6 D2 L2 W11 N16 W16 S63 E13 N8 FOP=[YR=2019] E7 FGR=[YR=2019] S11 E20 N23 W20 S12$ N6 W7 S6$ N6 E7 N6 E20 N35$.

EXTRA FEATURES

LN	OB/XF CODE	DESCRIPTION	BLD	CAP	L	W	UNITS	UT	Adj R	ADJ UNIT PRICE	ORIG COND	YEAR ON	YEAR ACTUAL	Q	% COND	OB/XF MKT VALUE	NOTES
1	0810	CONCRETE A	0	100	0	0	705.00	SF	6.50	6.50	100	2019	2019	3	97	4,445	

LAND DESCRIPTION

TOTAL OB/XF 4,445

LN	USE CODE	CLS	LAND USE DESCRIPTION	CAP	RD	LOC ZONE	FRONT	DEPTH	TOT LND UTS	UNIT TYPE	DT	DPTH FACT	% COND	TOT ADJ	UNIT PRICE	ADJ UNIT PRICE	LAND VALUE	OTHER ADJUSTMENTS AND NOTES	YEAR	DENSITY	DECL	FRZ	YR	CONSRV
1	000100	C	RES	100		PUD	0.00	0.00	1.00	LT		1.00	1.00	1.00	60,000.00	60,000.00	60,000							

REVIEW DATE 08/15/2019 BY KB Total Acres: 0.00 Total Land Value: 60,000 Market: 0 Agricultural: 0 Common: 60,000 PRINTED 07/30/2025 BY SYS