LOT 57
PLUMMER CREEK PHASE TWO C & D
OR 2223/684

REDFERN JAMES REGINALD JR & TERRI LYNN
85542 RED KNOT WAY
YULEE, FL 32097

2025

12-2N-26-1604-0057-0000

BUILDING CHARACTERISTICS

ELEMENT	CD	CONSTRUCTION
Exterior Wall	10	ABOVE AVG 90
Exterior Wall	21	STONE 10
Roof Structur	08	IRREGULAR 100
Roof Cover	03	COMP SHNGL 100
Interior Wall	05	DRYWALL 100
Interior Floo	11	CLAY TILE 50
Interior Floo	14	CARPET 50
Air Condition	03	CENTRAL 100
Heating Type	04	AIR DUCTED 100
Bedrooms		5 100
Bathrooms		4 100
Frame	02	WOOD FRAME 100
Stories	2.	2. 100
Units		0 100
Occupancy	00	NONE 100
Quality	04	Quality Level 04
DOR CODE	0100	SINGLE FAMILY
MAP NUM		MKT AREA 05
NEIGHBORHOOD/LOC	5015.00	

AREA TYPE	TOTAL GROSS AREA	PCT OF BASE	YEAR	TOT ADJ AREA	SUBAREA MARKET VALUE
BAS	2,484	100	2019	2,484	274,524
FGR	622	55	2019	342	37,797
FOP	65	30	2019	20	2,211
FOP	208	30	2019	62	6,852
FUS	689	100	2019	689	76,146
PTO	160	5	2019	8	884
STR	40	10	2019	4	442
TOTALS	4,268			3,609	398,855

MARKET ADJUSTMENTS

TYPE	MDL	EFF. AREA	TOT ADJ PTS	EFF. BASE RATE	REPL. COST NEW	AYB	EYB	ECON	FNCT		NORM	% COND
0100	01	3,609	112.8330	112.83	407,203	2019	2019	0	0	0	2.05	97.95

1 SINGLE FAM – 100% - 2020 Heated Area: 3173 HX Base Yr 2020

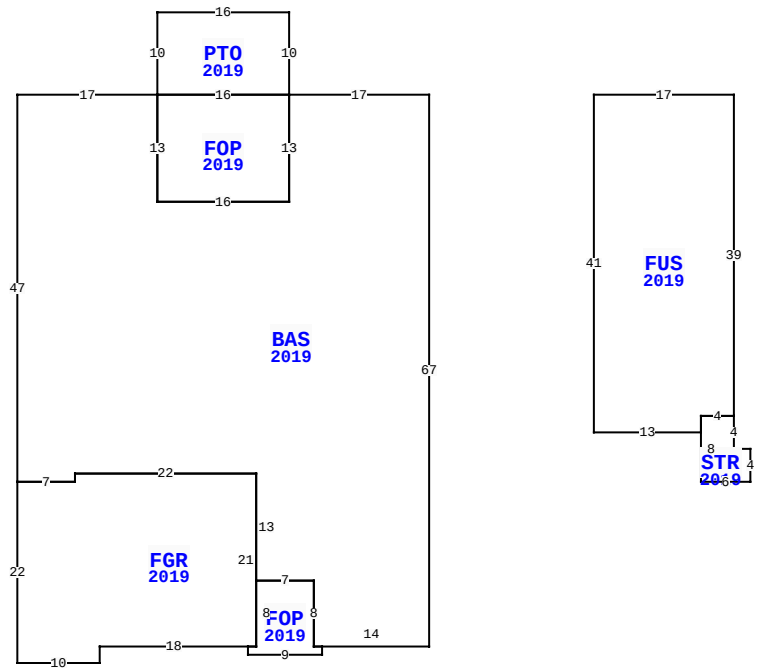

85542 RED KNOT WAY, YULEE

BLD DATE		LGL DATE	
XF DATE		LAND DATE	04/04/2025 MLU
INC DATE		AG DATE	

NASSAU COUNTY PROPERTY

PAGE 1 of 1 4

VALUATION SUMMARY

VALUATION BY		STANDARD
Tax Group: 4	Tax Dist:	
BUILDING MARKET VALUE		398,855
TOTAL MARKET OB/XF VALUE		8,471
TOTAL LAND VALUE - MARKET		60,000
TOTAL MARKET VALUE		467,326
SOH/AGL Deduction		114,517
ASSESSED VALUE		352,809
TOTAL EXEMPTION VALUE	HX HB	50,722
BASE TAXABLE VALUE		302,087
TOTAL JUST VALUE		467,326
NCON VALUE		0
INCOME VALUE		
PREVIOUS YEAR MKT VALUE		444,412

PERMIT NUM	DESCRIPTION	AMT	ISSUED
19000362	CO ISSUED	0	06/10/2019
18009652	NEW CONSTR	419,478	01/01/2019

SALES DATA

OFF RECORD Number	DATE	TYPE INST	Q U	V I	RSN CD	SALE PRICE
2462/1320	4/21/2021	WD	U	I	11	100
GRANTOR: REDFERN FAMILY TRUST						
GRANTEE: REDFERN JAMES REGIN						
2348/0934	3/20/2020	WD	U	I	11	100
GRANTOR: REDFERN JAMES R JR &						
GRANTEE: REDFERN FAMILY TRUS						

BUILDING NOTES

BUILDING DIMENSIONS

BAS=[YR=2019] W17 PTO=[YR=2019] N10 W16 S10 FOP=[YR=2019] S13 E16 N13 W16$ E16$ S13 W16 N13 W17 S47 FGR=[YR=2019] S22 E10 N2 E18 FOP=[YR=2019] S1 E9 N1 W1 N8 W7 S8 W1$ E1 N21 W22 S1 W7$ E7 N1 E22 S13 E7 S8 E14 N67$ PTR=E20 FUS=[YR=2019] E17 S39 STR=[YR=2019] S4 E2 S4 W6 N8 E4$ W4 S2 W13 N41$ W20$.

EXTRA FEATURES

LN	OB/XF CODE	DESCRIPTION	BLD	CAP	L	W	UNITS	UT	Adj R	ADJ UNIT PRICE	ORIG COND	YEAR ON	YEAR ACTUAL	Q	% COND	OB/XF MKT VALUE	NOTES
1	0810	CONCRETE A	0	100	0	0	984.00	SF	6.50	6.50	100	2019	2019	3	97	6,204	
2	0476	VF 6 SBPL	0	100	0	0	66.00	LF	32.00	32.00	100	2019	2019	3	94	1,985	
3	0470	VNYL GATE	0	100	0	0	1.00	UT	300.00	300.00	100	2019	2019	3	94	282	

LAND DESCRIPTION

TOTAL OB/XF 8,471

LN	USE CODE	CLS	LAND USE DESCRIPTION	CAP	RD	LOC ZONE	FRONT	DEPTH	TOT LND UTS	UNIT TYPE	DT	DPTH FACT	% COND	TOT ADJ	UNIT PRICE	ADJ UNIT PRICE	LAND VALUE	OTHER ADJUSTMENTS AND NOTES	YEAR	DENSITY	DECL	FRZ	YR	CONSRV
1	000100	C	RES	100		PUD	0.00	0.00	1.00	LT		1.00	1.00	1.00	60,000.00	60,000.00	60,000							

REVIEW DATE 10/04/2019 BY KB Total Acres: 0.00 Total Land Value: 60,000 Market: 0 Agricultural: 0 Common: 60,000 PRINTED 07/30/2025 BY SYS