LOT 43
PLUMMER CREEK PHASE TWO B
PBK 8/170

ROWLAND KIEL & ALICIA
78651 GOLDFINCH LN
YULEE, FL 32097

2025

12-2N-26-1603-0043-0000

BUILDING CHARACTERISTICS

ELEMENT	CD	CONSTRUCTION
Exterior Wall	10	ABOVE AVG 100
Roof Structur	03	GABLE/HIP 100
Roof Cover	08	CLAY TILE 100
Interior Wall	05	DRYWALL 100
Interior Floo	11	CLAY TILE 50
Interior Floo	14	CARPET 50
Air Condition	03	CENTRAL 100
Heating Type	04	AIR DUCTED 100
Bedrooms		4 100
Bathrooms		3 100
Frame	02	WOOD FRAME 100
Stories	2.	2. 100
Units		0 100
Occupancy	00	NONE 100
Quality	04	Quality Level 04
DOR CODE	0100	SINGLE FAMILY
MAP NUM		MKT AREA 05
NEIGHBORHOOD/LOC	5014.00	

AREA TYPE	TOTAL GROSS AREA	PCT OF BASE	YEAR	TOT ADJ AREA	SUBAREA MARKET VALUE
BAS	1,921	100	2018	1,921	233,166
FGR	651	55	2018	358	43,453
FOP	48	30	2018	14	1,699
FOP	224	30	2018	67	8,132
FUS	408	100	2018	408	49,522
PTO	355	5	2026	18	2,185
STR	72	10	2018	7	849
TOTALS	3,679			2,793	339,008

MARKET ADJUSTMENTS

TYPE	MDL	EFF. AREA	TOT ADJ PTS	EFF. BASE RATE	REPL. COST NEW	AYB	EYB	ECON	FNCT		NORM	% COND
0100	01	2,793	124.4880	124.49	347,701	2018	2018	0	0	0	2.50	97.50

1 SINGLE FAM – 100% - 2019 Heated Area: 2329 HX Base Yr 2019

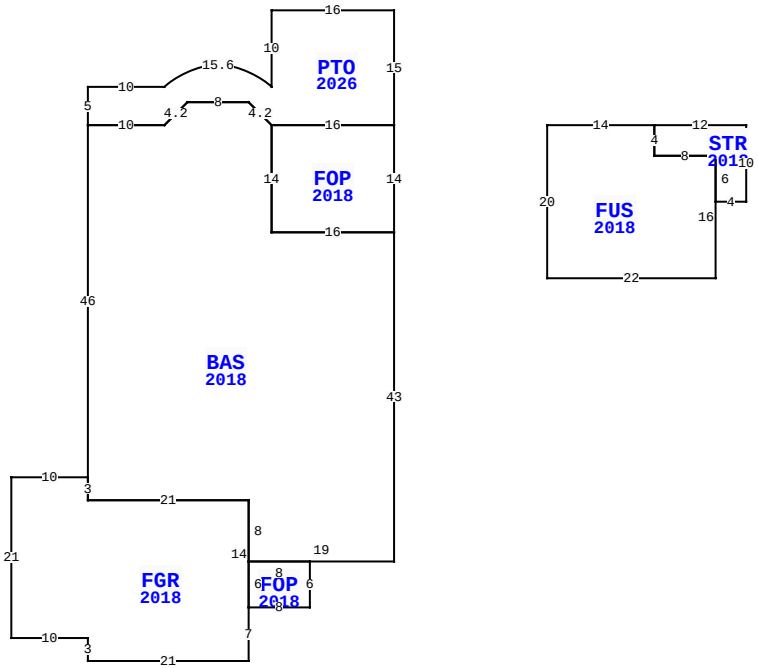

78651 GOLDFINCH LN, YULEE

BLD DATE		LGL DATE	
XF DATE		LAND DATE	
INC DATE		AG DATE	

NASSAU COUNTY PROPERTY

PAGE 1 of 1 4

VALUATION SUMMARY

VALUATION BY		STANDARD
Tax Group: 4	Tax Dist:	
BUILDING MARKET VALUE		339,008
TOTAL MARKET OB/XF VALUE		7,539
TOTAL LAND VALUE - MARKET		55,000
TOTAL MARKET VALUE		401,547
SOH/AGL Deduction		150,965
ASSESSED VALUE		250,582
TOTAL EXEMPTION VALUE	HX HB	50,722
BASE TAXABLE VALUE		199,860
TOTAL JUST VALUE		401,547
NCON VALUE		0
INCOME VALUE		
PREVIOUS YEAR MKT VALUE		384,148

PERMIT NUM	DESCRIPTION	AMT	ISSUED
17007394	CO ISSUED	0	04/04/2018
17007394	NEW CONSTR	307,261	12/01/2017

SALES DATA

OFF RECORD Number	DATE	TYPE INST	Q / U	V / I	RSN CD	SALE PRICE
2190/0146	4/12/2018	WD	Q	I	02	311,400
GRANTOR: DREAM FINDERS HOMES L						
GRANTEE: ROWLAND KIEL & ALIC						
2155/0759	10/26/2017	WD	Q	V	05	187,000
GRANTOR: BWC LAND PLUMMER LLC						
GRANTEE: DREAM FINDERS HOMES						

BUILDING NOTES

BUILDING DIMENSIONS

BAS=[YR=2018;ORIG=-16,0] U3L3 W8 D3L3 W10 S46 S3 E21 S8 E19 N43 W16 N14 $
FGR=[YR=2018;ORIG=-40,46] W10 S21 E10 S3 E21 N7 N14 W21 N3 $
FUS=[YR=2018;ORIG=20,0] E14 S4 E8 S16 W22 N20 $
FOP=[YR=2018;ORIG=0,0] W16 S14 E16 N14 $
STR=[YR=2018;ORIG=34,0] E12 S10 W4 N6 W8 N4 $
FOP=[YR=2018;ORIG=-19,63] E8 N6 W8 S6 $
PTR=[ORIG=0,0] E20 W20 $
PTO=[YR=2026;ORIG=-40,0] N5 E10 E14G90 N10 E16 S15 W16 U3L3 W8 D3L3 W10 $
.

EXTRA FEATURES

LN	OB/XF CODE	DESCRIPTION	BLD	CAP	L	W	UNITS	UT	Adj R	ADJ UNIT PRICE	ORIG COND	YEAR ON	YEAR ACTUAL	Q	% COND	OB/XF MKT VALUE	NOTES
1	0811	CONCRETE B	0	100	0	0	1,106.00	SF	5.20	5.20	100	2018	2018	3	97	5,579	
2	0504	FP-ELECTRI	0	100	0	0	1.00	UT	2,000.00	2,000.00	100	2018	2018	3	98	1,960	

LAND DESCRIPTION

TOTAL OB/XF 7,539

LN	USE CODE	CLS	LAND USE DESCRIPTION	CAP	RD	LOC ZONE	FRONT	DEPTH	TOT LND UTS	UNIT TYPE	DT	DPTH FACT	% COND	TOT ADJ	UNIT PRICE	ADJ UNIT PRICE	LAND VALUE	OTHER ADJUSTMENTS AND NOTES	YEAR	DENSITY	DECL	FRZ	YR	CONSRV
1	000100	C	RES	100		PUD	0.00	0.00	1.00	LT		1.00	1.00	1.00	55,000.00	55,000.00	55,000							

REVIEW DATE 02/06/2019 BY KB Total Acres: 0.00 Total Land Value: 55,000 Market: 0 Agricultural: 0 Common: 55,000 PRINTED 07/30/2025 BY SYS