LOT 34
PLUMMER CREEK PHASE TWO B
PBK 8/170

GRANDJEAN ROBERT & MELISSA
78729 GOLDFINCH LN
YULEE, FL 32097

2025

12-2N-26-1603-0034-0000

NASSAU COUNTY PROPERTY

BUILDING CHARACTERISTICS

ELEMENT	CD	CONSTRUCTION
Exterior Wall	10	ABOVE AVG 90
Exterior Wall	21	STONE 10
Roof Structur	08	IRREGULAR 100
Roof Cover	03	COMP SHNGL 100
Interior Wall	05	DRYWALL 100
Interior Floo	11	CLAY TILE 70
Interior Floo	14	CARPET 30
Air Condition	03	CENTRAL 100
Heating Type	04	AIR DUCTED 100
Bedrooms		3 100
Bathrooms		3 100
Frame	02	WOOD FRAME 100
Stories	2.	2. 100
Units		0 100
Occupancy	00	NONE 100
Quality	04	Quality Level 04

DOR CODE	0100	SINGLE FAMILY	
MAP NUM		MKT AREA	05
NEIGHBORHOOD/LOC	5014.00		

AREA TYPE	TOTAL GROSS AREA	PCT OF BASE	YEAR	TOT ADJ AREA	SUBAREA MARKET VALUE
BAS	1,909	100	2017	1,909	227,609
FGR	672	55	2017	370	44,115
FOP	48	30	2017	14	1,669
FSP	224	40	2017	90	10,730
FUS	371	100	2017	371	44,234
STR	58	10	2017	6	715
TOTALS	3,282			2,760	329,073

MARKET ADJUSTMENTS

TYPE	MDL	EFF. AREA	TOT ADJ PTS	EFF. BASE RATE	REPL. COST NEW	AYB	EYB	ECON	FNCT		NORM	% COND
0100	01	2,760	122.9760	122.98	339,425	2017	2017	0	0	0	3.05	96.95

1 SINGLE FAM – 100% - 2024 Heated Area: 2280 HX Base Yr 2024

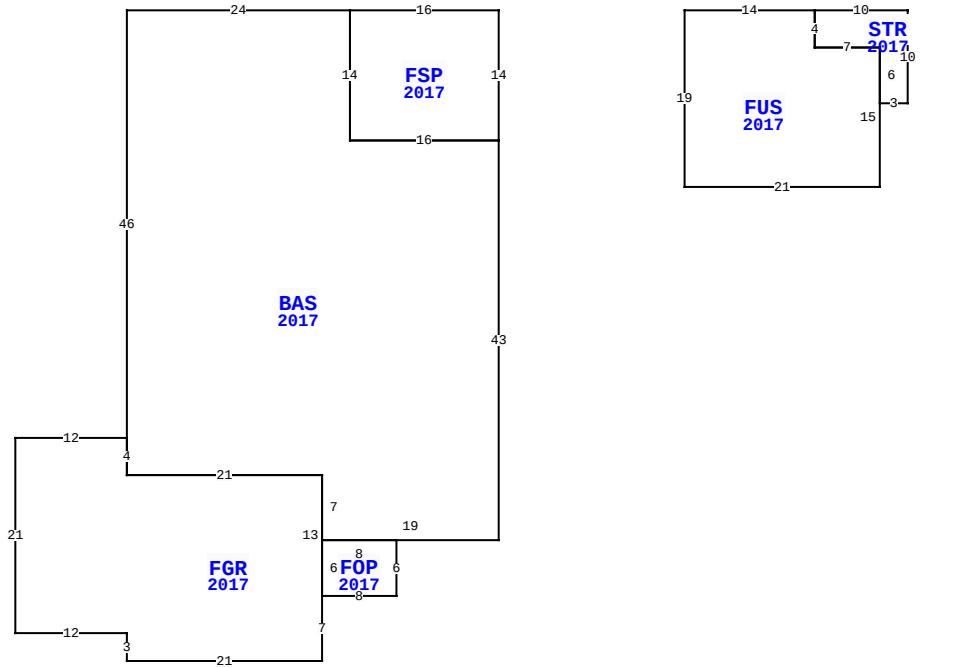

78729 GOLDFINCH LN, YULEE

BLD DATE		LGL DATE	
XF DATE		LAND DATE	
INC DATE		AG DATE	

VALUATION SUMMARY

VALUATION BY		STANDARD
Tax Group: 4	Tax Dist:	
BUILDING MARKET VALUE		329,073
TOTAL MARKET OB/XF VALUE		5,847
TOTAL LAND VALUE - MARKET		55,000
TOTAL MARKET VALUE		389,920
SOH/AGL Deduction		98,118
ASSESSED VALUE		291,802
TOTAL EXEMPTION VALUE	HX HB VX	55,722
BASE TAXABLE VALUE		236,080
TOTAL JUST VALUE		389,920
NCON VALUE		0
INCOME VALUE		
PREVIOUS YEAR MKT VALUE		375,136

PERMIT NUM	DESCRIPTION	AMT	ISSUED
17001884	CO ISSUED	0	10/27/2017
17001884	NEW CONSTR	295,705	04/01/2017

SALES DATA

OFF RECORD Number	DATE	TYPE INST	Q U	V I	RSN CD	SALE PRICE
2659/1870	8/07/2023	WD	Q	I	01	459,000
GRANTOR: GIERHAHN STEVEN T & G						
GRANTEE: GRANDJEAN ROBERT &						
2156/0251	10/26/2017	WD	Q	I	01	282,800
GRANTOR: DREAM FINDERS HOMES L						
GRANTEE: GIERHAHN STEVEN T &						

BUILDING NOTES

BUILDING DIMENSIONS

FSP=[YR=2017] W16 BAS=[YR=2017] W24 S46 FGR=[YR=2017] W12 S21 E12 S3 E21 N7 FOP=[YR=2017] E8 N6 W8 S6$ N13 W21 N4$ S4 E21 S7 E19 N43 W16 N14$ S14 E16 N14$ PTR=E20 FUS=[YR=2017] E14 STR=[YR=2017] E10 S10 W3 N6 W7 N4$ S4 E7 S15 W21 N19$ W20$.

EXTRA FEATURES

LN	OB/XF CODE	DESCRIPTION	BLD	CAP	L	W	UNITS	UT	Adj R	ADJ UNIT PRICE	ORIG COND	YEAR ON	YEAR ACTUAL	Q	% COND	OB/XF MKT VALUE	NOTES
1	0810	CONCRETE A	0	100	0	0	937.00	SF	6.50	6.50	100	2017	2017	3	96	5,847	

LAND DESCRIPTION

TOTAL OB/XF 5,847

LN	USE CODE	CLS	LAND USE DESCRIPTION	CAP	RD	LOC ZONE	FRONT	DEPTH	TOT LND UTS	UNIT TYPE	DT	DPTH FACT	% COND	TOT ADJ	UNIT PRICE	ADJ UNIT PRICE	LAND VALUE	OTHER ADJUSTMENTS AND NOTES	YEAR	DENSITY	DECL	FRZ	YR	CONSRV
1	000100	C	RES	100		PUD	0.00	0.00	1.00	LT		1.00	1.00	1.00	55,000.00	55,000.00	55,000							

REVIEW DATE 01/31/2024 BY KBA Total Acres: 0.00 Total Land Value: 55,000 Market: 0 Agricultural: 0 Common: 55,000 PRINTED 07/30/2025 BY SYS