LOT 3
IN OR 2065/191
PLUMMER CREEK PHASE TWO A

JACOBS JUSTIN A & AMANDA GODWIN REV TRUST/JACOBS J
79553 PLUMMERS CREEK DR
YULEE, FL 32097

2025

12-2N-26-1602-0003-0000

NASSAU COUNTY PROPERTY

BUILDING CHARACTERISTICS

ELEMENT	CD	CONSTRUCTION
Exterior Wall	10	ABOVE AVG 90
Exterior Wall	21	STONE 10
Roof Structur	03	GABLE/HIP 100
Roof Cover	03	COMP SHNGL 100
Interior Wall	05	DRYWALL 100
Interior Floo	11	CLAY TILE 50
Interior Floo	14	CARPET 50
Air Condition	03	CENTRAL 100
Heating Type	04	AIR DUCTED 100
Bedrooms		5 100
Bathrooms		3 100
Frame	02	WOOD FRAME 100
Stories	0	0 100
Units		0 100
Occupancy	00	NONE 100
Quality	04	Quality Level 04

DOR CODE	0100	SINGLE FAMILY	
MAP NUM		MKT AREA	05
NEIGHBORHOOD/LOC	5013.00		

AREA TYPE	TOTAL GROSS AREA	PCT OF BASE	YEAR	TOT ADJ AREA	SUBAREA MARKET VALUE
BAS	2,349	100	2016	2,349	270,400
FGR	664	55	2016	365	42,017
FOP	52	30	2016	16	1,842
FSP	240	40	2016	96	11,051
PTO	136	5	2016	7	805
TOTALS	3,441			2,833	326,116

MARKET ADJUSTMENTS

TYPE	MDL	EFF. AREA	TOT ADJ PTS	EFF. BASE RATE	REPL. COST NEW	AYB	EYB	ECON	FNCT		NORM	% COND
0100	01	2,833	119.3472	119.35	338,119	2016	2016	0	0	0	3.55	96.45

1 SINGLE FAM – 100% - 2017 Heated Area: 2349 HX Base Yr 2017

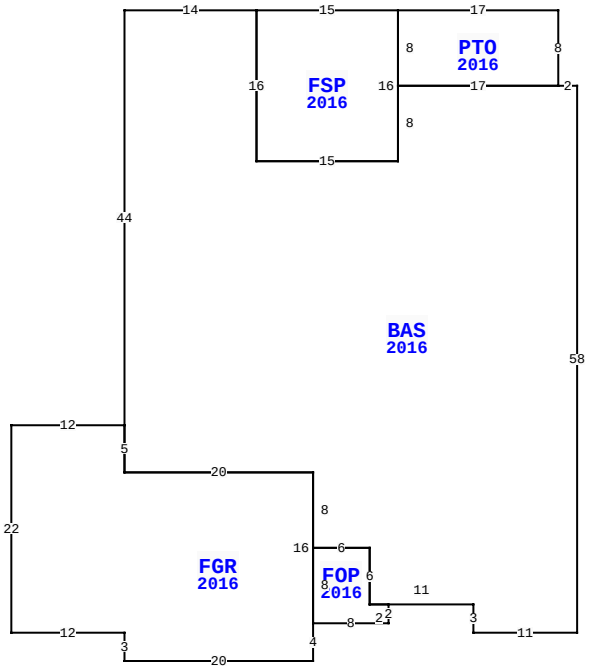

79553 PLUMMERS CREEK DR, YULEE

BLD DATE		LGL DATE	
XF DATE		LAND DATE	04/04/2025 MLU
INC DATE		AG DATE	

VALUATION SUMMARY

VALUATION BY		STANDARD
Tax Group: 4	Tax Dist:	
BUILDING MARKET VALUE		326,116
TOTAL MARKET OB/XF VALUE		4,036
TOTAL LAND VALUE - MARKET		60,000
TOTAL MARKET VALUE		390,152
SOH/AGL Deduction		156,838
ASSESSED VALUE		233,314
TOTAL EXEMPTION VALUE	HX HB	50,722
BASE TAXABLE VALUE		182,592
TOTAL JUST VALUE		390,152
NCON VALUE		0
INCOME VALUE		
PREVIOUS YEAR MKT VALUE		370,487

PERMIT NUM	DESCRIPTION	AMT	ISSUED
B1632036	CO ISSUED	0	10/27/2016
B1632036	NEW CONSTR	300,004	04/01/2016

SALES DATA

OFF RECORD Number	DATE	TYPE INST	Q U	V I	RSN CD	SALE PRICE
2065/0191	8/08/2016	WD	Q	I	01	256,300
GRANTOR: DREAM FINDERS HOMES L						
GRANTEE: JACOBS JUSTIN ALAN						
2039/0377	4/08/2016	WD	Q	V	05	992,600
GRANTOR: BWC LAND PLUMMER LLC						
GRANTEE: DREAM FINDERS HOMES						

BUILDING NOTES

BUILDING DIMENSIONS

BAS=[YR=2016] W2 PTO=[YR=2016] N8 W17 FSP=[YR=2016] W15 S16 E15 N16$ S8 E17$ W17 S8 W15 N16 W14 S44 FGR=[YR=2016] W12 S22 E12 S3 E20 N4 FOP=[YR=2016] E8 N2 W2 N6 W6 S8$ N16 W20 N5$ S5 E20 S8 E6 S6 E11 S3 E11 N58$.

EXTRA FEATURES

LN	OB/XF CODE	DESCRIPTION	BLD	CAP	L	W	UNITS	UT	Adj R	ADJ UNIT PRICE	ORIG COND	YEAR ON	YEAR ACTUAL	Q	% COND	OB/XF MKT VALUE	NOTES
1	0812	CONCRETE C	0	100	0	0	1,062.00	SF	4.00	4.00	100	2016	2016	3	95	4,036	

LAND DESCRIPTION

TOTAL OB/XF 4,036

LN	USE CODE	CLS	LAND USE DESCRIPTION	CAP	RD	LOC ZONE	FRONT	DEPTH	TOT LND UTS	UNIT TYPE	DT	DPTH FACT	% COND	TOT ADJ	UNIT PRICE	ADJ UNIT PRICE	LAND VALUE	OTHER ADJUSTMENTS AND NOTES	YEAR	DENSITY	DECL	FRZ	YR	CONSRV
1	000100	C	RES	100		PUD	0.00	0.00	1.00	LT		1.00	1.00	1.00	60,000.00	60,000.00	60,000							

REVIEW DATE 06/22/2021 BY KBA Total Acres: 0.00 Total Land Value: 60,000 Market: 0 Agricultural: 0 Common: 60,000 PRINTED 07/30/2025 BY SYS