LOT 174
IN OR 1994/999
PLUMMER CREEK #1 PB 8/28

MOORE DOUGLAS F JR
83304 PURPLE MARTIN DR
YULEE, FL 32097

2025

12-2N-26-1601-0174-0000

BUILDING CHARACTERISTICS

ELEMENT	CD	CONSTRUCTION
Exterior Wall	10	ABOVE AVG 100
Roof Structur	03	GABLE/HIP 100
Roof Cover	03	COMP SHNGL 100
Interior Wall	05	DRYWALL 100
Interior Floo	11	CLAY TILE 80
Interior Floo	14	CARPET 20
Air Condition	03	CENTRAL 100
Heating Type	04	AIR DUCTED 100
Bedrooms		4 100
Bathrooms		3 100
Frame	02	WOOD FRAME 100
Stories	2.	2. 100
Units		0 100
Occupancy	00	NONE 100
Quality	04	Quality Level 04
DOR CODE	0100	SINGLE FAMILY
MAP NUM		MKT AREA 05
NEIGHBORHOOD/LOC	5013.00	

AREA TYPE	TOTAL GROSS AREA	PCT OF BASE	YEAR	TOT ADJ AREA	SUBAREA MARKET VALUE
BAS	1,704	100	2015	1,704	200,177
FGR	460	55	2015	253	29,722
FOP	42	30	2015	13	1,527
FOP	230	30	2015	69	8,106
FUS	392	100	2015	392	46,050
PTO	56	5	2015	3	352
UOP	100	20	2025	20	2,349
UOP	348	20	2025	70	8,223
TOTALS	3,332			2,524	296,508

MARKET ADJUSTMENTS

TYPE	MDL	EFF. AREA	TOT ADJ PTS	EFF. BASE RATE	REPL. COST NEW	AYB	EYB	ECON	FNCT		NORM	% COND
0100	01	2,524	122.3712	122.37	308,862	2015	2015	0	0	0	4.00	96.00

1 SINGLE FAM – 100% - 2016 Heated Area: 2096 HX Base Yr 2016

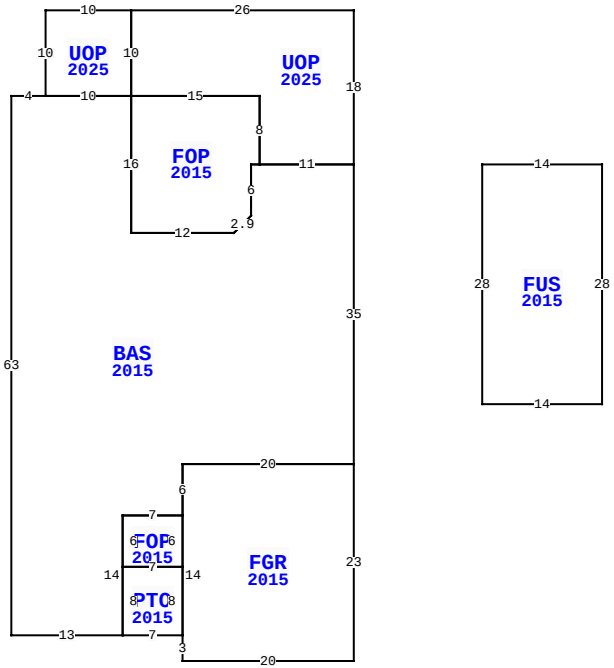

83304 PURPLE MARTIN DR, YULEE

BLD DATE		LGL DATE	
XF DATE		LAND DATE	04/04/2025 MLU
INC DATE		AG DATE	

NASSAU COUNTY PROPERTY

PAGE 1 of 1 4

VALUATION SUMMARY

VALUATION BY		STANDARD
Tax Group: 4	Tax Dist:	
BUILDING MARKET VALUE		296,508
TOTAL MARKET OB/XF VALUE		10,480
TOTAL LAND VALUE - MARKET		60,000
TOTAL MARKET VALUE		366,988
SOH/AGL Deduction		125,548
ASSESSED VALUE		241,440
TOTAL EXEMPTION VALUE	HX HB	50,722
BASE TAXABLE VALUE		190,718
TOTAL JUST VALUE		366,988
NCON VALUE		10,710
INCOME VALUE		
PREVIOUS YEAR MKT VALUE		338,123

PERMIT NUM	DESCRIPTION	AMT	ISSUED
B240002905	911 T325 SCREEN R	10,000	03/13/2024
B1530328	CO ISSUED	0	07/13/2015
B1530328	NEW CONSTR	262,572	04/01/2015

SALES DATA

OFF RECORD Number	DATE	TYPE INST	Q U	V I	RSN CD	SALE PRICE
1994/0999	7/28/2015	WD	Q	I	01	213,800
GRANTOR: DREAM FINDERS HOMES L						
GRANTEE: MOORE DOUGLAS F JR						
1938/1437	9/09/2014	SW	Q	V	05	100,300
GRANTOR: BWC LAND PLUMMER LLC						
GRANTEE: DREAM FINDERS HOMES						

BUILDING NOTES

BUILDING DIMENSIONS

BAS=[YR=2015;ORIG=0,0] W11 W1 S6 D2L2 W12 N16 W10 W4 S63 E13 N14 E7 N6 E20 N35 $
FGR=[YR=2015;ORIG=-20,55] S3 E20 N23 W20 S6 S14 $
FUS=[YR=2015;ORIG=15,0] E14 S28 W14 N28 $
UOP=[YR=2025;ORIG=-26,-8] E15 S8 E11 N18 W26 S10 $
FOP=[YR=2015;ORIG=-11,0] N8 W15 S16 E12 U2R2 N6 E1 $
PTO=[YR=2015;ORIG=-27,55] E7 N8 W7 S8 $
FOP=[YR=2015;ORIG=-20,41] W7 S6 E7 N6 $
PTR=[ORIG=0,0] E15 W15 $
UOP=[YR=2025;ORIG=-26,-8] W10 N10 E10 S10 $
.

EXTRA FEATURES

LN	OB/XF CODE	DESCRIPTION	BLD	CAP	L	W	UNITS	UT	Adj R	ADJ UNIT PRICE	ORIG COND	YEAR ON	YEAR ACTUAL	Q	% COND	OB/XF MKT VALUE	NOTES
1	0810	CONCRETE A	0	100	0	0	711.00	SF	6.50	6.50	100	2015	2015	3	95	4,390	
2	0911	SCRN RM A	0	100	0	0	348.00	SF	17.50	17.50	100	2025	2024		100	6,090	

LAND DESCRIPTION

TOTAL OB/XF 10,480

LN	USE CODE	CLS	LAND USE DESCRIPTION	CAP	RD	LOC ZONE	FRONT	DEPTH	TOT LND UTS	UNIT TYPE	DT	DPTH FACT	% COND	TOT ADJ	UNIT PRICE	ADJ UNIT PRICE	LAND VALUE	OTHER ADJUSTMENTS AND NOTES	YEAR	DENSITY	DECL	FRZ	YR	CONSRV
1	000100	C	RES	100		PUD	0.00	0.00	1.00	LT		1.00	1.00	1.00	60,000.00	60,000.00	60,000							

REVIEW DATE 05/22/2024 BY TW Total Acres: 0.00 Total Land Value: 60,000 Market: 0 Agricultural: 0 Common: 60,000 PRINTED 07/30/2025 BY SYS