LOT 172
PLUMMER CREEK #1 PB 8/28

MAY ANDREW
83286 PURPLE MARTIN DRIVE
YULEE, FL 32097

2025

12-2N-26-1601-0172-0000

NASSAU COUNTY PROPERTY

BUILDING CHARACTERISTICS

ELEMENT	CD	CONSTRUCTION
Exterior Wall	31	HARDIE BRD 90
Exterior Wall	21	STONE 10
Roof Structur	08	IRREGULAR 100
Roof Cover	03	COMP SHNGL 100
Interior Wall	05	DRYWALL 100
Interior Floo	11	CLAY TILE 90
Interior Floo	14	CARPET 10
Air Condition	03	CENTRAL 100
Heating Type	04	AIR DUCTED 100
Bedrooms		4 100
Bathrooms		3 100
Frame	02	WOOD FRAME 100
Stories	2.	2. 100
Units		0 100
Occupancy	00	NONE 100
Quality	04	Quality Level 04

DOR CODE 0100 SINGLE FAMILY
MAP NUM
MKT AREA 05
NEIGHBORHOOD/LOC 5013.00

AREA TYPE	TOTAL GROSS AREA	PCT OF BASE	YEAR	TOT ADJ AREA	SUBAREA MARKET VALUE
BAS	1,689	100	2015	1,689	209,445
FGR	460	55	2015	253	31,374
FOP	42	30	2015	13	1,612
FOP	112	30	2015	34	4,216
FUS	406	100	2015	406	50,346
PTO	112	5	2016	6	744
PTO	210	5	2026	10	1,240
TOTALS	3,031			2,411	298,978

MARKET ADJUSTMENTS

TYPE	MDL	EFF. AREA	TOT ADJ PTS	EFF. BASE RATE	REPL. COST NEW	AYB	EYB	ECON	FNCT		NORM	% COND
0100	01	2,411	129.2424	129.24	311,598	2015	2015	0	0	0	4.05	95.95

1 SINGLE FAM – 100% - 2025 Heated Area: 2095 HX Base Yr 2025

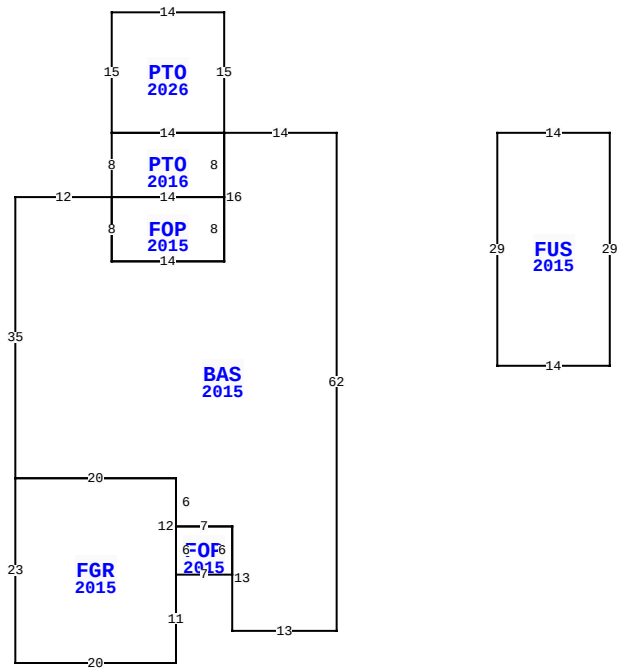

83286 PURPLE MARTIN DR, YULEE

BLD DATE		LGL DATE	
XF DATE		LAND DATE	04/04/2025 MLU
INC DATE		AG DATE	

VALUATION SUMMARY

VALUATION BY		STANDARD
Tax Group: 4	Tax Dist:	
BUILDING MARKET VALUE		298,978
TOTAL MARKET OB/XF VALUE		12,578
TOTAL LAND VALUE - MARKET		60,000
TOTAL MARKET VALUE		371,556
SOH/AGL Deduction		0
ASSESSED VALUE		371,556
TOTAL EXEMPTION VALUE	HX HB	50,722
BASE TAXABLE VALUE		320,834
TOTAL JUST VALUE		371,556
NCON VALUE		0
INCOME VALUE		
PREVIOUS YEAR MKT VALUE		352,081

PERMIT NUM	DESCRIPTION	AMT	ISSUED
22010226	SCRN ENCLSR	3,445	07/01/2022
B1429434	CO ISSUED	0	01/30/2015
B1429434	NEW CONSTR	259,442	10/01/2014

SALES DATA

OFF RECORD Number	DATE	TYPE INST	Q / U	V / I	RSN CD	SALE PRICE
2697/770	3/01/2024	WD	Q	I	01	458,000
GRANTOR: ELLIS WILLIAM RUSSELL						
GRANTEE: MAY ANDREW						
2565/1139	5/18/2022	WD	Q	I	02	448,000
GRANTOR: ELY JACOB M & AMANDA						
GRANTEE: ELLIS WILLIAM R REV						

BUILDING NOTES

BUILDING DIMENSIONS

BAS=[YR=2015;ORIG=0,0] W14 S16 W14 N8 W12 S35 E20 S6 E7 S13 E13 N62 $
FGR=[YR=2015;ORIG=-40,43] S23 E20 N11 N12 W20 $
FUS=[YR=2015;ORIG=20,0] E14 S29 W14 N29 $
PTO=[YR=2016;ORIG=-14,0] W14 S8 E14 N8 $
FOP=[YR=2015;ORIG=-28,8] S8 E14 N8 W14 $
FOP=[YR=2015;ORIG=-20,55] E7 N6 W7 S6 $
PTR=[ORIG=0,0] E20 W20 $
PTO=[YR=2026;ORIG=-28,-15] E14 S15 W14 N15 $
.

EXTRA FEATURES

LN	OB/XF CODE	DESCRIPTION	BLD	CAP	L	W	UNITS	UT	Adj R	ADJ UNIT PRICE	ORIG COND	YEAR ON	YEAR ACTUAL	Q	% COND	OB/XF MKT VALUE	NOTES
1	0810	CONCRETE A	0	100	0	0	784.00	SF	6.50	6.50	100	2015	2015	3	95	4,841	
2	0476	VF 6 SBPL	0	100	0	0	102.00	LF	32.00	32.00	100	2015	2015	3	87	2,840	
3	0475	VF 4 SBPL	0	100	0	0	54.00	LF	14.00	14.00	100	2015	2015	3	87	658	
4	0855	CONC PAVER	0	100	0	0	196.00	SF	10.00	10.00	100	2016	2016	3	95	1,862	
5	0911	SCRN RM A	1	100	14	10	140.00	SF	17.50	17.50	100	2023	2023		97	2,377	

LAND DESCRIPTION

TOTAL OB/XF 12,578

LN	USE CODE	CLS	LAND USE DESCRIPTION	CAP	RD	LOC ZONE	FRONT	DEPTH	TOT LND UTS	UNIT TYPE	DT	DPTH FACT	% COND	TOT ADJ	UNIT PRICE	ADJ UNIT PRICE	LAND VALUE	OTHER ADJUSTMENTS AND NOTES	YEAR	DENSITY	DECL	FRZ	YR	CONSRV
1	000100	C	RES	100		PUD	0.00	0.00	1.00	LT		1.00	1.00	1.00	60,000.00	60,000.00	60,000							

REVIEW DATE 06/22/2021 BY KBA Total Acres: 0.00 Total Land Value: 60,000 Market: 0 Agricultural: 0 Common: 60,000 PRINTED 07/30/2025 BY SYS