LOT 165
IN OR 2026/1106
PLUMMER CREEK #1 PB 8/28

JAMES WILLIAM CHARLES/TURGALIYEVA AIZHANA
83222 PURPLE MARTIN DR
YULEE, FL 32097

2025

12-2N-26-1601-0165-0000

BUILDING CHARACTERISTICS

ELEMENT	CD	CONSTRUCTION
Exterior Wall	10	ABOVE AVG 90
Exterior Wall	21	STONE 10
Roof Structur	03	GABLE/HIP 100
Roof Cover	03	COMP SHNGL 100
Interior Wall	05	DRYWALL 100
Interior Floo	14	CARPET 60
Interior Floo	11	CLAY TILE 40
Air Condition	03	CENTRAL 100
Heating Type	04	AIR DUCTED 100
Bedrooms		5 100
Bathrooms		4 100
Frame	02	WOOD FRAME 100
Stories	2.	2. 100
Units		0 100
Occupancy	00	NONE 100
Quality	04	Quality Level 04
DOR CODE	0100	SINGLE FAMILY
MAP NUM		MKT AREA 05
NEIGHBORHOOD/LOC	5013.00	

AREA TYPE	TOTAL GROSS AREA	PCT OF BASE	YEAR	TOT ADJ AREA	SUBAREA MARKET VALUE
BAS	1,417	100	2016	1,417	148,655
FGR	440	55	2016	242	25,388
FOP	124	30	2016	37	3,881
FSP	180	40	2016	72	7,553
FUS	2,058	100	2016	2,058	215,902
PTO	120	5	2016	6	630
STR	33	10	2016	3	314
TOTALS	4,372			3,835	402,325

MARKET ADJUSTMENTS

TYPE	MDL	EFF. AREA	TOT ADJ PTS	EFF. BASE RATE	REPL. COST NEW	AYB	EYB	ECON	FNCT		NORM	% COND
0100	01	3,835	108.7695	108.77	417,133	2016	2016	0	0	0	3.55	96.45

1 SINGLE FAM – 0% - 2025 Heated Area: 3475 HX Base Yr

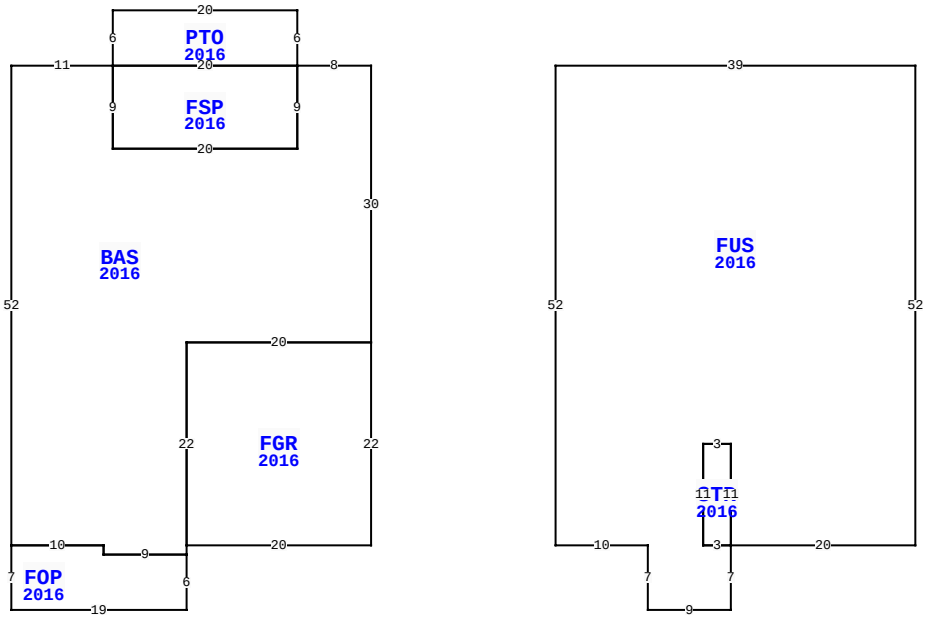

83222 PURPLE MARTIN DR, YULEE

BLD DATE		LGL DATE	
XF DATE		LAND DATE	04/04/2025 MLU
INC DATE		AG DATE	

NASSAU COUNTY PROPERTY

PAGE 1 of 1 4

VALUATION SUMMARY

VALUATION BY	STANDARD
Tax Group: 4	Tax Dist:
BUILDING MARKET VALUE	402,325
TOTAL MARKET OB/XF VALUE	4,810
TOTAL LAND VALUE - MARKET	60,000
TOTAL MARKET VALUE	467,135
SOH/AGL Deduction	0
ASSESSED VALUE	467,135
TOTAL EXEMPTION VALUE	0
BASE TAXABLE VALUE	467,135
TOTAL JUST VALUE	467,135
NCON VALUE	0
INCOME VALUE	
PREVIOUS YEAR MKT VALUE	444,046

PERMIT NUM	DESCRIPTION	AMT	ISSUED
B1531142	CO ISSUED	0	02/03/2016
B1531142	NEW CONSTR	352,034	09/01/2015

SALES DATA

OFF RECORD Number	DATE	TYPE INST	Q U	V I	RSN CD	SALE PRICE
2026/1106	1/29/2016	WD	Q	I	01	286,000
GRANTOR: DREAM FINDERS HOMES L						
GRANTEE: JAMES WILLIAM CHARL						
1991/1824	7/09/2015	WD	U	V	11	35,000
GRANTOR: BWC LAND PLUMMER LLC						
GRANTEE: DREAM FINDERS HOMES						

BUILDING NOTES

BUILDING DIMENSIONS

BAS=[YR=2016] W8 PTO=[YR=2016] N6 W20 S6 FSP=[YR=2016] S9 E20 N9 W20$ E20$ S9 W20 N9 W11 S52 FOP=[YR=2016] S7 E19 N6 W9 N1 W10$ E10 S1 E9 N1 FGR=[YR=2016] E20 N22 W20 S22$ N22 E20 N30$ PTR=E20 FUS=[YR=2016] E39 S52 W20 STR=[YR=2016] W3 N11 E3 S11$ N11 W3 S11 E3 S7 W9 N7 W10 N52 $ W20$.

EXTRA FEATURES

LN	OB/XF CODE	DESCRIPTION	BLD	CAP	L	W	UNITS	UT	Adj R	ADJ UNIT PRICE	ORIG COND	YEAR ON	YEAR ACTUAL	Q	% COND	OB/XF MKT VALUE	NOTES
1	0810	CONCRETE A	0	0	0	0	779.00	SF	6.50	6.50	100	2016	2016	3	95	4,810	

LAND DESCRIPTION

TOTAL OB/XF 4,810

LN	USE CODE	CLS	LAND USE DESCRIPTION	CAP	RD	LOC ZONE	FRONT	DEPTH	TOT LND UTS	UNIT TYPE	DT	DPTH FACT	% COND	TOT ADJ	UNIT PRICE	ADJ UNIT PRICE	LAND VALUE	OTHER ADJUSTMENTS AND NOTES	YEAR	DENSITY	DECL	FRZ	YR	CONSRV
1	000100	C	RES	0		PUD	0.00	0.00	1.00	LT		1.00	1.00	1.00	60,000.00	60,000.00	60,000							

REVIEW DATE 08/10/2022 BY KBA Total Acres: 0.00 Total Land Value: 60,000 Market: 0 Agricultural: 0 Common: 60,000 PRINTED 07/30/2025 BY SYS