LOT 131
PLUMMER CREEK #1 PB 8/28

ALLEN GARRETT N & JULIA M
1909 FLINTSHIRE DR
CHESAPEAKE, VA 23323

2025

12-2N-26-1601-0131-0000

BUILDING CHARACTERISTICS

ELEMENT	CD	CONSTRUCTION
Exterior Wall	10	ABOVE AVG 90
Exterior Wall	21	STONE 10
Roof Structur	08	IRREGULAR 100
Roof Cover	03	COMP SHNGL 100
Interior Wall	05	DRYWALL 100
Interior Floo	11	CLAY TILE 50
Interior Floo	14	CARPET 50
Air Condition	03	CENTRAL 100
Heating Type	04	AIR DUCTED 100
Bedrooms		5 100
Bathrooms		2.5 100
Frame	02	WOOD FRAME 100
Stories	2.	2. 100
Units		0 100
Occupancy	00	NONE 100
Quality	04	Quality Level 04
DOR CODE	0100	SINGLE FAMILY
MAP NUM		MKT AREA 05
NEIGHBORHOOD/LOC	5013.00	

AREA TYPE	TOTAL GROSS AREA	PCT OF BASE	YEAR	TOT ADJ AREA	SUBAREA MARKET VALUE
BAS	1,446	100	2015	1,446	149,996
FGR	460	55	2015	253	26,244
FOP	104	30	2015	31	3,215
FSP	171	40	2015	68	7,053
FUS	2,127	100	2015	2,127	220,637
PTO	285	5	2024	14	1,453
STR	30	10	2015	3	311
TOTALS	4,623			3,942	408,910

MARKET ADJUSTMENTS

TYPE	MDL	EFF. AREA	TOT ADJ PTS	EFF. BASE RATE	REPL. COST NEW	AYB	EYB	ECON	FNCT		NORM	% COND
0100	01	3,942	108.1080	108.11	426,170	2015	2015	0	0	0	4.05	95.95

1 SINGLE FAM – 0% - 0 Heated Area: 3573 HX Base Yr

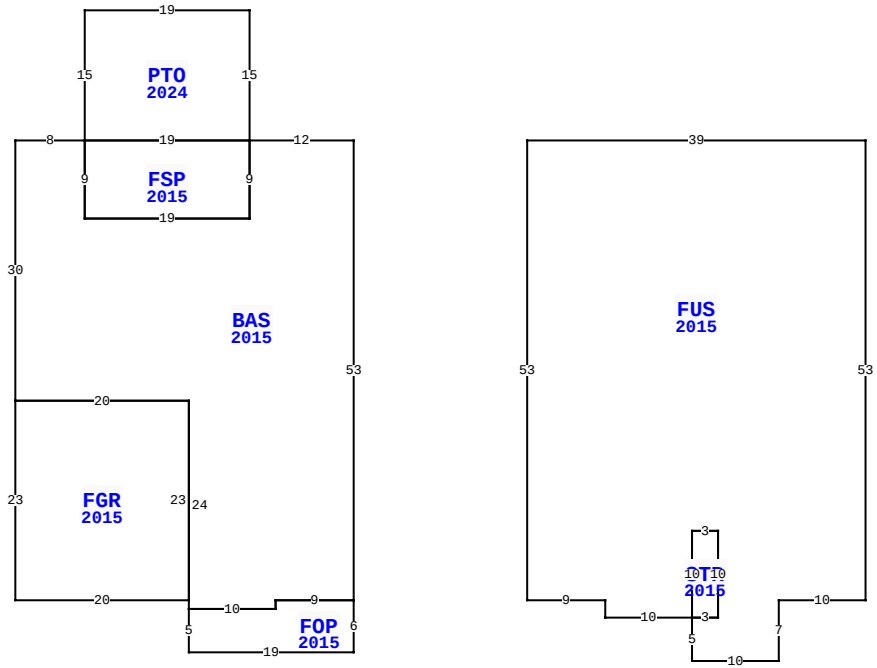

83117 PURPLE MARTIN DR, YULEE

BLD DATE		LGL DATE	
XF DATE		LAND DATE	04/04/2025 MLU
INC DATE		AG DATE	

NASSAU COUNTY PROPERTY

PAGE 1 of 1 4

VALUATION SUMMARY

VALUATION BY	STANDARD
Tax Group: 4	Tax Dist:
BUILDING MARKET VALUE	408,910
TOTAL MARKET OB/XF VALUE	11,975
TOTAL LAND VALUE - MARKET	60,000
TOTAL MARKET VALUE	480,885
SOH/AGL Deduction	0
ASSESSED VALUE	480,885
TOTAL EXEMPTION VALUE	0
BASE TAXABLE VALUE	480,885
TOTAL JUST VALUE	480,885
NCON VALUE	0
INCOME VALUE	
PREVIOUS YEAR MKT VALUE	457,684

PERMIT NUM	DESCRIPTION	AMT	ISSUED
B1530898	CO ISSUED	0	11/01/2015
B1530898	NEW CONSTR	218,726	07/01/2015

SALES DATA

OFF RECORD Number	DATE	TYPE INST	Q / U	V / I	RSN CD	SALE PRICE
2469/1117	6/08/2021	WD	Q	I	01	415,000
GRANTOR: COLEMAN JEREMY L & SH						
GRANTEE: ALLEN GARRETT N & J						
2015/1636	11/25/2015	WD	Q	I	01	281,000
GRANTOR: DREAM FINDERS HOMES L						
GRANTEE: COLEMAN JEREMY L &						

BUILDING NOTES

BUILDING DIMENSIONS

FUS=[YR=2015;ORIG=20,0] E39 S53 W10 S7 W10 N5 E3 N10 W3 S10 W10 N2 W9 N53 $
BAS=[YR=2015;ORIG=0,0] W12 S9 W19 N9 W8 S30 E20 S24 E10 N1 E9 N53 $
FGR=[YR=2015;ORIG=-39,30] S23 E20 N23 W20 $
FSP=[YR=2015;ORIG=-12,0] W19 S9 E19 N9 $
FOP=[YR=2015;ORIG=-19,54] S5 E19 N6 W9 S1 W10 $
STR=[YR=2015;ORIG=39,55] E3 N10 W3 S10 $
PTR=[ORIG=0,0] E20 W20 $
PTO=[YR=2024;ORIG=-31,-15] E19 S15 W19 N15 $
.

EXTRA FEATURES

LN	OB/XF CODE	DESCRIPTION	BLD	CAP	L	W	UNITS	UT	Adj R	ADJ UNIT PRICE	ORIG COND	YEAR ON	YEAR ACTUAL	Q	% COND	OB/XF MKT VALUE	NOTES
1	0810	CONCRETE A	0	0	0	0	785.00	SF	6.50	6.50	100	2015	2015	3	95	4,847	
2	0462	ST/AL FNC	0	0	0	0	792.00	SF	10.00	10.00	100	2020	2020	3	90	7,128	

LAND DESCRIPTION

TOTAL OB/XF 11,975

LN	USE CODE	CLS	LAND USE DESCRIPTION	CAP	RD	LOC ZONE	FRONT	DEPTH	TOT LND UTS	UNIT TYPE	DT	DPTH FACT	% COND	TOT ADJ	UNIT PRICE	ADJ UNIT PRICE	LAND VALUE	OTHER ADJUSTMENTS AND NOTES	YEAR	DENSITY	DECL	FRZ	YR	CONSRV
1	000100	C	RES	0		PUD	0.00	0.00	1.00	LT		1.00	1.00	1.00	60,000.00	60,000.00	60,000							

REVIEW DATE 06/25/2021 BY KBA Total Acres: 0.00 Total Land Value: 60,000 Market: 0 Agricultural: 0 Common: 60,000 PRINTED 07/30/2025 BY SYS