LOT 56
IN OR 2010/1700
PLUMMER CREEK #1 PB 8/28

LAMB CARL EDWARD III
230 DAYDREAM AVE
YULEE, FL 32097

2025

12-2N-26-1601-0056-0000

NASSAU COUNTY PROPERTY

BUILDING CHARACTERISTICS

ELEMENT	CD	CONSTRUCTION
Exterior Wall	10	ABOVE AVG 100
Roof Structur	08	IRREGULAR 100
Roof Cover	03	COMP SHNGL 100
Interior Wall	05	DRYWALL 100
Interior Floo	11	CLAY TILE 50
Interior Floo	14	CARPET 50
Air Condition	03	CENTRAL 100
Heating Type	04	AIR DUCTED 100
Bedrooms		4 100
Bathrooms		3 100
Frame	02	WOOD FRAME 100
Stories	2.	2. 100
Units		0 100
Occupancy	00	NONE 100
Quality	04	Quality Level 04

DOR CODE 0100 SINGLE FAMILY
MAP NUM | MKT AREA 05
NEIGHBORHOOD/LOC 5013.00

AREA TYPE	TOTAL GROSS AREA	PCT OF BASE	YEAR	TOT ADJ AREA	SUBAREA MARKET VALUE
BAS	1,909	100	2015	1,909	218,909
FGR	420	55	2015	231	26,489
FOP	48	30	2015	14	1,605
FSP	224	40	2015	90	10,321
FUS	379	100	2015	379	43,461
STR	51	10	2015	5	573
TOTALS	3,031			2,628	301,358

MARKET ADJUSTMENTS

TYPE	MDL	EFF. AREA	TOT ADJ PTS	EFF. BASE RATE	REPL. COST NEW	AYB	EYB	ECON	FNCT		NORM	% COND
0100	01	2,628	119.4480	119.45	313,915	2015	2015	0	0	0	4.00	96.00

1 SINGLE FAM – 0% - 0 Heated Area: 2288 HX Base Yr

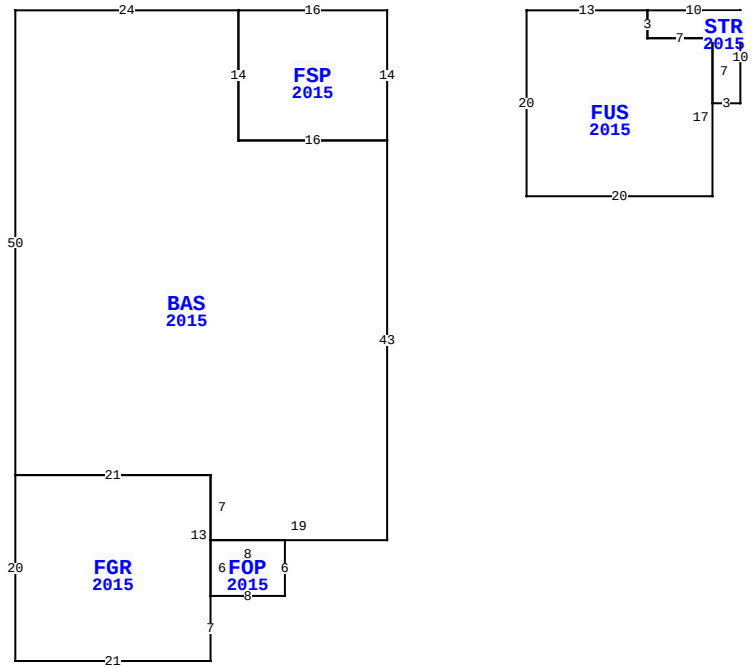

82028 HOODED WARBLER CT, YULEE

BLD DATE		LGL DATE	
XF DATE		LAND DATE	04/04/2025 MLU
INC DATE		AG DATE	

VALUATION SUMMARY

VALUATION BY	STANDARD
Tax Group: 4	Tax Dist:
BUILDING MARKET VALUE	301,358
TOTAL MARKET OB/XF VALUE	4,372
TOTAL LAND VALUE - MARKET	60,000
TOTAL MARKET VALUE	365,730
SOH/AGL Deduction	0
ASSESSED VALUE	365,730
TOTAL EXEMPTION VALUE	0
BASE TAXABLE VALUE	365,730
TOTAL JUST VALUE	365,730
NCON VALUE	0
INCOME VALUE	
PREVIOUS YEAR MKT VALUE	347,159

PERMIT NUM	DESCRIPTION	AMT	ISSUED
B1530474	CO ISSUED	0	10/26/2015
B1530474	NEW CONSTR	282,686	05/01/2015

SALES DATA

OFF RECORD Number	DATE	TYPE INST	Q U	V I	RSN CD	SALE PRICE
2010/1700	10/22/2015	WD	Q	I	01	241,700
GRANTOR: DREAM FINDERS HOMES L						
GRANTEE: LAMB CARL EDWARD II						
1978/0746	5/07/2015	WD	Q	V	05	96,100
GRANTOR: BWC LAND PLUMMER LLC						
GRANTEE: DREAM FINDERS HOMES						

BUILDING NOTES

EXTRA FEATURES

LN	OB/XF CODE	DESCRIPTION	BLD	CAP	L	W	UNITS	UT	Adj R	ADJ UNIT PRICE	ORIG COND	YEAR ON	YEAR ACTUAL	Q	% COND	OB/XF MKT VALUE	NOTES
1	0810	CONCRETE A	0	0	0	0	708.00	SF	6.50	6.50	100	2015	2015	3	95	4,372	

BUILDING DIMENSIONS

BAS=[YR=2015;ORIG=-16,0] W24 S50 E21 S7 E19 N43 W16 N14 $
FGR=[YR=2015;ORIG=-40,50] S20 E21 N7 N13 W21 $
FUS=[YR=2015;ORIG=15,0] E13 S3 E7 S17 W20 N20 $
FSP=[YR=2015;ORIG=0,0] W16 S14 E16 N14 $
STR=[YR=2015;ORIG=28,0] E10 S10 W3 N7 W7 N3 $
FOP=[YR=2015;ORIG=-19,63] E8 N6 W8 S6 $
PTR=[ORIG=0,0] E15 W15 $
.

LAND DESCRIPTION

TOTAL OB/XF 4,372

LN	USE CODE	CLS	LAND USE DESCRIPTION	CAP	RD	LOC ZONE	FRONT	DEPTH	TOT LND UTS	UNIT TYPE	DT	DPTH FACT	% COND	TOT ADJ	UNIT PRICE	ADJ UNIT PRICE	LAND VALUE	OTHER ADJUSTMENTS AND NOTES	YEAR	DENSITY	DECL	FRZ	YR	CONSRV
1	000100	C	RES	0		PUD	0.00	0.00	1.00	LT		1.00	1.00	1.00	60,000.00	60,000.00	60,000							

REVIEW DATE 08/10/2022 BY KBA Total Acres: 0.00 Total Land Value: 60,000 Market: 0 Agricultural: 0 Common: 60,000 PRINTED 07/30/2025 BY SYS