LOT 55
PLUMMER CREEK #1 PB 8/28

TORRES DAVID & IVELISSE L/E/
82018 HOODED WARBLER CT
YULEE, FL 32097

2025

12-2N-26-1601-0055-0000

NASSAU COUNTY PROPERTY

BUILDING CHARACTERISTICS

ELEMENT	CD	CONSTRUCTION
Exterior Wall	10	ABOVE AVG 100
Roof Structur	03	GABLE/HIP 100
Roof Cover	03	COMP SHNGL 100
Interior Wall	05	DRYWALL 100
Interior Floo	11	CLAY TILE 60
Interior Floo	14	CARPET 40
Air Condition	03	CENTRAL 100
Heating Type	04	AIR DUCTED 100
Bedrooms		3 100
Bathrooms		2 100
Frame	02	WOOD FRAME 100
Stories	1.	1. 100
Units		0 100
Occupancy	00	NONE 100
Quality	04	Quality Level 04
DOR CODE	0100	SINGLE FAMILY
MAP NUM		MKT AREA 05
NEIGHBORHOOD/LOC	5013.00	

AREA TYPE	TOTAL GROSS AREA	PCT OF BASE	YEAR	TOT ADJ AREA	SUBAREA MARKET VALUE
BAS	1,705	100	2016	1,705	197,752
FGR	734	55	2016	404	46,858
FOP	37	30	2016	11	1,276
FSP	208	40	2016	83	9,627
PTO	130	5	2016	6	696
TOTALS	2,814			2,209	256,208

MARKET ADJUSTMENTS

TYPE	MDL	EFF. AREA	TOT ADJ PTS	EFF. BASE RATE	REPL. COST NEW	AYB	EYB	ECON	FNCT		NORM	% COND
0100	01	2,209	120.1872	120.19	265,500	2016	2016	0	0	0	3.50	96.50

1 SINGLE FAM – 100% - 2024 Heated Area: 1705 HX Base Yr

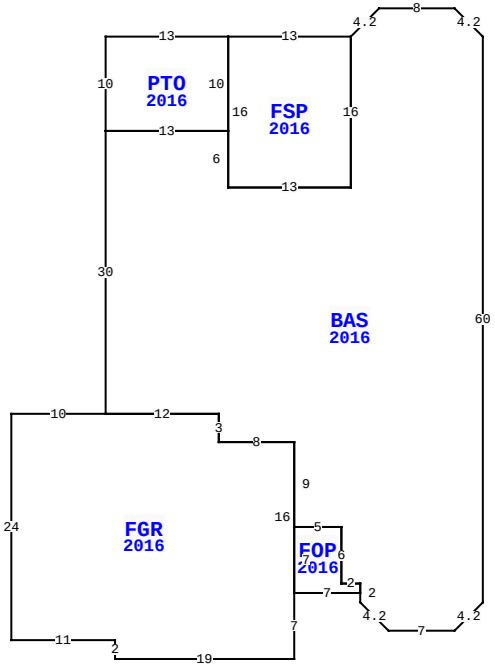

82018 HOODED WARBLER CT, YULEE

BLD DATE		LGL DATE	
XF DATE		LAND DATE	04/04/2025 MLU
INC DATE		AG DATE	

VALUATION SUMMARY

VALUATION BY		STANDARD
Tax Group: 4	Tax Dist:	
BUILDING MARKET VALUE		256,208
TOTAL MARKET OB/XF VALUE		5,819
TOTAL LAND VALUE - MARKET		60,000
TOTAL MARKET VALUE		322,027
SOH/AGL Deduction		7,628
ASSESSED VALUE		314,399
TOTAL EXEMPTION VALUE	13	314,399
BASE TAXABLE VALUE		0
TOTAL JUST VALUE		322,027
NCON VALUE		0
INCOME VALUE		
PREVIOUS YEAR MKT VALUE		305,538

PERMIT NUM	DESCRIPTION	AMT	ISSUED
B1530620	CO ISSUED	0	02/29/2016
B1530620	NEW CONSTR	233,290	06/01/2015

SALES DATA

OFF RECORD Number	DATE	TYPE INST	Q U	V I	RSN CD	SALE PRICE
2280/0637	6/04/2019	SW	U	I	11	100
GRANTOR: TORRES DAVID & IVELIS						
GRANTEE: CARMONA SAMANTHA C						
2218/0181	8/10/2018	WD	Q	I	01	235,000
GRANTOR: COLE RICHARD L & BREN						
GRANTEE: TORRES DAVID						

BUILDING NOTES

BUILDING DIMENSIONS

BAS=[YR=2016] U3 L3 W8 D3 L3 FSP=[YR=2016] W13 PTO=[YR=2016] W13 S10 E13 N10$ S16 E13 N16$ S16 W13 N6 W13 S30 FGR=[YR=2016] W10 S24 E11 S2 E19 N7 FOP=[YR=2016] E7 N1 W2 N6 W5 S7$ N16 W8 N3 W12$ E12 S3 E8 S9 E5 S6 E2 S2 D3 R3 E7 R3 U3 N60$.

EXTRA FEATURES

LN	OB/XF CODE	DESCRIPTION	BLD	CAP	L	W	UNITS	UT	Adj R	ADJ UNIT PRICE	ORIG COND	YEAR ON	YEAR ACTUAL	Q	% COND	OB/XF MKT VALUE	NOTES
1	0811	CONCRETE B	0	100	0	0	1,178.00	SF	5.20	5.20	100	2016	2016	3	95	5,819	

LAND DESCRIPTION

TOTAL OB/XF 5,819

LN	USE CODE	CLS	LAND USE DESCRIPTION	CAP	RD	LOC ZONE	FRONT	DEPTH	TOT LND UTS	UNIT TYPE	DT	DPTH FACT	% COND	TOT ADJ	UNIT PRICE	ADJ UNIT PRICE	LAND VALUE	OTHER ADJUSTMENTS AND NOTES	YEAR	DENSITY	DECL	FRZ	YR	CONSRV
1	000100	C	RES	100		PUD	0.00	0.00	1.00	LT		1.00	1.00	1.00	60,000.00	60,000.00	60,000							

REVIEW DATE 10/22/2019 BY KBA Total Acres: 0.00 Total Land Value: 60,000 Market: 0 Agricultural: 0 Common: 60,000 PRINTED 07/30/2025 BY SYS