LOT 54
IN OR 2102/391
PLUMMER CREEK #1 PB 8/28

AARONSON PATRICK MICHAEL
79686 PLUMMERS CREEK DR
YULEE, FL 32097

2025

12-2N-26-1601-0054-0000

NASSAU COUNTY PROPERTY

BUILDING CHARACTERISTICS

ELEMENT	CD	CONSTRUCTION
Exterior Wall	10	ABOVE AVG 100
Roof Structur	08	IRREGULAR 100
Roof Cover	03	COMP SHNGL 100
Interior Wall	05	DRYWALL 100
Interior Floo	11	CLAY TILE 50
Interior Floo	14	CARPET 50
Air Condition	03	CENTRAL 100
Heating Type	04	AIR DUCTED 100
Bedrooms		3 100
Bathrooms		2 100
Frame	02	WOOD FRAME 100
Stories	1.	1. 100
Units		0 100
Occupancy	00	NONE 100
Quality	04	Quality Level 04

DOR CODE 0100 SINGLE FAMILY
MAP NUM | MKT AREA 05
NEIGHBORHOOD/LOC 5013.00

AREA TYPE	TOTAL GROSS AREA	PCT OF BASE	YEAR	TOT ADJ AREA	SUBAREA MARKET VALUE
BAS	1,937	100	2014	1,937	221,759
FGR	714	55	2014	393	44,993
FOP	48	30	2014	14	1,602
FSP	224	40	2017	90	10,303
TOTALS	2,923			2,434	278,658

MARKET ADJUSTMENTS

TYPE	MDL	EFF. AREA	TOT ADJ PTS	EFF. BASE RATE	REPL. COST NEW	AYB	EYB	ECON	FNCT		NORM	% COND
0100	01	2,434	119.8785	119.88	291,788	2014	2014	0	0	0	4.50	95.50

1 SINGLE FAM – 100% - 2018 Heated Area: 1937 HX Base Yr 2018

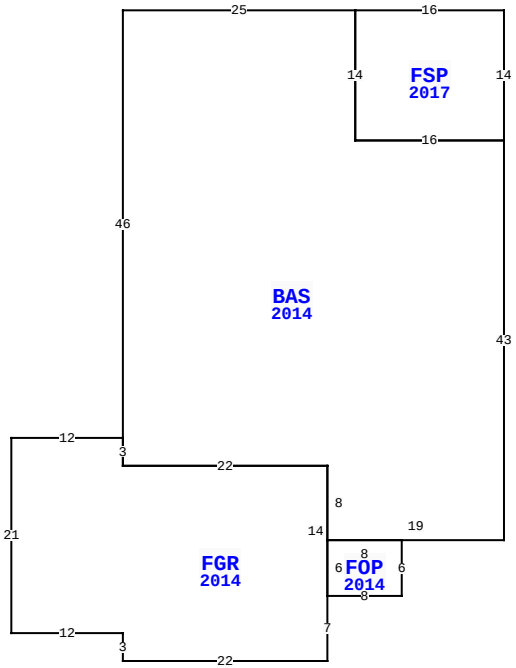

79686 PLUMMERS CREEK DR, YULEE

BLD DATE		LGL DATE	
XF DATE		LAND DATE	04/04/2025 MLU
INC DATE		AG DATE	

VALUATION SUMMARY

VALUATION BY		STANDARD
Tax Group: 4	Tax Dist:	
BUILDING MARKET VALUE		278,658
TOTAL MARKET OB/XF VALUE		8,040
TOTAL LAND VALUE - MARKET		60,000
TOTAL MARKET VALUE		346,698
SOH/AGL Deduction		117,689
ASSESSED VALUE		229,009
TOTAL EXEMPTION VALUE	HX HB	50,722
BASE TAXABLE VALUE		178,287
TOTAL JUST VALUE		346,698
NCON VALUE		0
INCOME VALUE		
PREVIOUS YEAR MKT VALUE		329,254

PERMIT NUM	DESCRIPTION	AMT	ISSUED
1703138	ADDITION	6,500	06/01/2017
B1428283	CO ISSUED	0	06/03/2014
B1428283	NEW CONSTR	0	06/01/2014

SALES DATA

OFF RECORD Number	DATE	TYPE INST	Q U /	V I /	RSN CD	SALE PRICE
2102/0391	1/17/2017	WD	Q	I	01	235,000
GRANTOR: GENINS ROBERT & SUZAN						
GRANTEE: AARONSON PATRICK MI						
1924/1579	6/09/2014	WD	Q	I	02	201,900
GRANTOR: DREAM FINDERS HOMES L						
GRANTEE: GENINS ROBERT & SUZ						

BUILDING NOTES

BUILDING DIMENSIONS

FSP=[YR=2017] W16 BAS=[YR=2014] W25 S46 FGR=[YR=2014] W12 S21 E12 S3 E22 N7 FOP=[YR=2014] E8 N6 W8 S6$ N14 W22 N3$ S3 E22 S8 E19 N43 W16 N14$ S14 E16 N14$.

EXTRA FEATURES

LN	OB/XF CODE	DESCRIPTION	BLD	CAP	L	W	UNITS	UT	Adj R	ADJ UNIT PRICE	ORIG COND	YEAR ON	YEAR ACTUAL	Q	% COND	OB/XF MKT VALUE	NOTES
1	0811	CONCRETE B	0	100	0	0	1,144.00	SF	5.20	5.20	100	2014	2014	3	94	5,592	
2	0476	VF 6 SBPL	0	100	0	0	90.00	LF	32.00	32.00	100	2014	2014	3	85	2,448	

LAND DESCRIPTION

TOTAL OB/XF 8,040

LN	USE CODE	CLS	LAND USE DESCRIPTION	CAP	RD	LOC ZONE	FRONT	DEPTH	TOT LND UTS	UNIT TYPE	DT	DPTH FACT	% COND	TOT ADJ	UNIT PRICE	ADJ UNIT PRICE	LAND VALUE	OTHER ADJUSTMENTS AND NOTES	YEAR	DENSITY	DECL	FRZ	YR	CONSRV
1	000100	C	RES	100		PUD	0.00	0.00	1.00	LT		1.00	1.00	1.00	60,000.00	60,000.00	60,000							

REVIEW DATE 08/10/2022 BY KBA Total Acres: 0.00 Total Land Value: 60,000 Market: 0 Agricultural: 0 Common: 60,000 PRINTED 07/30/2025 BY SYS