LOTS 21 & 22
IN OR 878/1978 & OR 1466/1703
EX R/W PT OR 1021/1415

CLAXTON PATSY A
55123 BIRCH CT
CALLAHAN, FL 32011

2025

12-2N-25-2350-0021-0000

NASSAU COUNTY PROPERTY

BUILDING CHARACTERISTICS

ELEMENT	CD	CONSTRUCTION
Exterior Wall	31	HARDIE BRD 100
Roof Structur	03	GABLE/HIP 100
Roof Cover	12	MODULAR MT 100
Interior Wall	05	DRYWALL 100
Interior Floo	11	CLAY TILE 50
Interior Floo	14	CARPET 50
Air Condition	03	CENTRAL 100
Heating Type	04	AIR DUCTED 100
Bedrooms		2 100
Bathrooms		1.5 100
Frame	02	WOOD FRAME 100
Stories	2.	2. 100
Units		0 100
Occupancy	00	NONE 100
Quality	01	Quality Level 01
DOR CODE	0100	SINGLE FAMILY
MAP NUM		MKT AREA 08
NEIGHBORHOOD/LOC	8026.00	

AREA TYPE	TOTAL GROSS AREA	PCT OF BASE	YEAR	TOT ADJ AREA	SUBAREA MARKET VALUE
BAL	248	15	2007	37	4,458
BAS	1,040	100	2007	1,040	125,321
FOP	360	30	2007	108	13,014
FUS	984	100	2007	984	118,573
STR	122	10	2008	12	1,446
UOP	350	20	2007	70	8,435
TOTALS	3,104			2,251	271,249

MARKET ADJUSTMENTS

TYPE	MDL	EFF. AREA	TOT ADJ PTS	EFF. BASE RATE	REPL. COST NEW	AYB	EYB	ECON	FNCT		NORM	% COND
0900	01	2,251	99.2250	130.98	294,836	2007	2007	0	0	0	8.00	92.00

1 SNGL FAM – 100% - 2008 Heated Area: 2024 HX Base Yr 2008

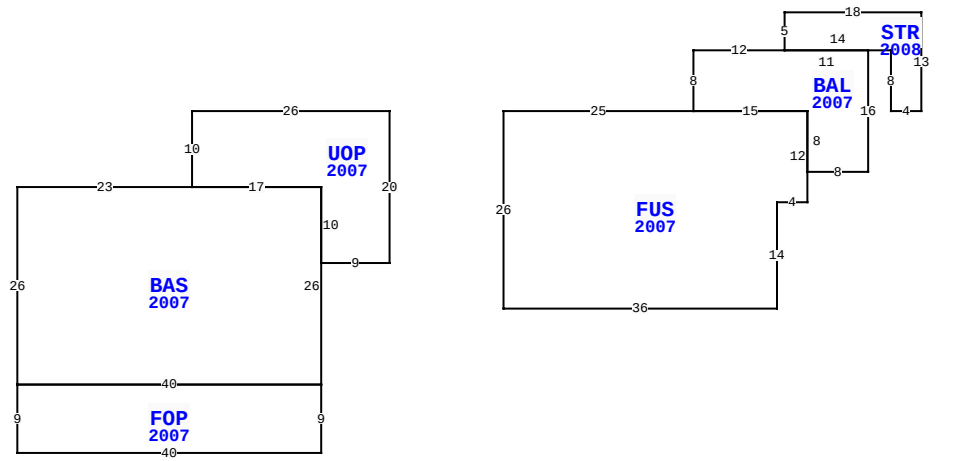

55123 BIRCH CT, CALLAHAN

BLD DATE		LGL DATE	
XF DATE		LAND DATE	03/31/2025 MLU
INC DATE		AG DATE	

VALUATION SUMMARY

VALUATION BY		STANDARD
Tax Group: 6	Tax Dist:	
BUILDING MARKET VALUE		316,752
TOTAL MARKET OB/XF VALUE		30,656
TOTAL LAND VALUE - MARKET		50,000
TOTAL MARKET VALUE		397,408
SOH/AGL Deduction		152,197
ASSESSED VALUE		245,211
TOTAL EXEMPTION VALUE	HX HB WX SX	105,722
BASE TAXABLE VALUE		139,489
TOTAL JUST VALUE		397,408
NCON VALUE		0
INCOME VALUE		
PREVIOUS YEAR MKT VALUE		377,095

PERMIT NUM	DESCRIPTION	AMT	ISSUED
B1429215	ADDITION	9,196	10/13/2014
R10916	REPAIR/RRF	8,000	12/01/2007
E20187	ELEC OTHER	2,000	11/01/2007
P12544	OTHER	0	07/01/2007
M13066	MECH OTHER	0	06/01/2007
E18874	ELEC OTHER	2,000	03/01/2007

SALES DATA

OFF RECORD Number	DATE	TYPE INST	Q / U	V / I	RSN CD	SALE PRICE
1466/1703	12/21/2006	WD	Q	V	06	100
GRANTOR: BARNES JANETTE M						
GRANTEE: CLAXTON W DOYLE & P						
0768/0036	8/09/1996	WD	U	V	09	72,000
GRANTOR: MCKENDREE HAROLD E						
GRANTEE: BARNES JANETTE M						

BUILDING NOTES

BUILDING DIMENSIONS

UOP=[YR=2007] W26 S10 BAS=[YR=2007] W23 S26 FOP=[YR=2007] S9 E40 N9 W40$ E40 N26 W17$ E17 S10 E9 N20$ PTR=E15 FUS=[YR=2007] E25 BAL=[YR=2007] N8 E12 STR=[YR=2008] N5 E18 S13 W4 N8 W14$ E11 S16 W8 N8 W15$ E15 S12 W4 S14 W36 N26$ W15$.

EXTRA FEATURES

LN	OB/XF CODE	DESCRIPTION	BLD	CAP	L	W	UNITS	UT	Adj R	ADJ UNIT PRICE	ORIG COND	YEAR ON	YEAR ACTUAL	Q	% COND	OB/XF MKT VALUE	NOTES
1	0810	CONCRETE A	0	100	0	0	390.00	SF	6.50	6.50	100	2007	2007	3	87	2,205	
2	0858	SCULP CONC	0	100	0	0	3,722.00	SF	7.80	7.80	100	2014	2014	3	98	28,451	

LAND DESCRIPTION

TOTAL OB/XF 30,656

LN	USE CODE	CLS	LAND USE DESCRIPTION	CAP	RD	LOC ZONE	FRONT	DEPTH	TOT LND UTS	UNIT TYPE	DT	DPTH FACT	% COND	TOT ADJ	UNIT PRICE	ADJ UNIT PRICE	LAND VALUE	OTHER ADJUSTMENTS AND NOTES	YEAR	DENSITY	DECL	FRZ	YR	CONSRV
1	000100	C	RES	100		RSF-1	0.00	0.00	1.00	LT		1.00	1.00	1.00	50,000.00	50,000.00	50,000							

REVIEW DATE 10/28/2019 BY KBA Total Acres: 0.00 Total Land Value: 50,000 Market: 0 Agricultural: 0 Common: 50,000 PRINTED 07/30/2025 BY SYS

LOTS 21 & 22
IN OR 878/1978 & OR 1466/1703
EX R/W PT OR 1021/1415

CLAXTON PATSY A
55123 BIRCH CT
CALLAHAN, FL 32011

2025

12-2N-25-2350-0021-0000

NASSAU COUNTY PROPERTY

BUILDING CHARACTERISTICS

ELEMENT	CD	CONSTRUCTION
Exterior Wall	31	HARDIE BRD 100
Roof Structur	03	GABLE/HIP 100
Roof Cover	12	MODULAR MT 100
Interior Wall	05	DRYWALL 100
Interior Floo	03	CONC FINSH 50
Interior Floo	14	CARPET 50
Air Condition	03	CENTRAL 100
Heating Type	04	AIR DUCTED 100
Bedrooms		0 100
Bathrooms		0.5 100
Frame	02	WOOD FRAME 100
Stories	1.	1. 100
Units		0 100
Occupancy	00	NONE 100
Quality	03	Quality Level 03
DOR CODE	0100	SINGLE FAMILY
MAP NUM		MKT AREA 08
NEIGHBORHOOD/LOC	8026.00	

AREA TYPE	TOTAL GROSS AREA	PCT OF BASE	YEAR	TOT ADJ AREA	SUBAREA MARKET VALUE
BAS	504	100	2014	504	28,419
FGR	364	55	2008	200	11,277
UOP	150	20	2014	30	1,692
USP	242	30	2014	73	4,116
TOTALS	1,260			807	45,503

MARKET ADJUSTMENTS

TYPE	MDL	EFF. AREA	TOT ADJ PTS	EFF. BASE RATE	REPL. COST NEW	AYB	EYB	ECON	FNCT		NORM	% COND
0150	01	807	114.4000	60.63	48,928	2008	2009	0	0	0	7.00	93.00

2 ACCESORY U – 100% - 2008 Heated Area: 504 HX Base Yr 2008

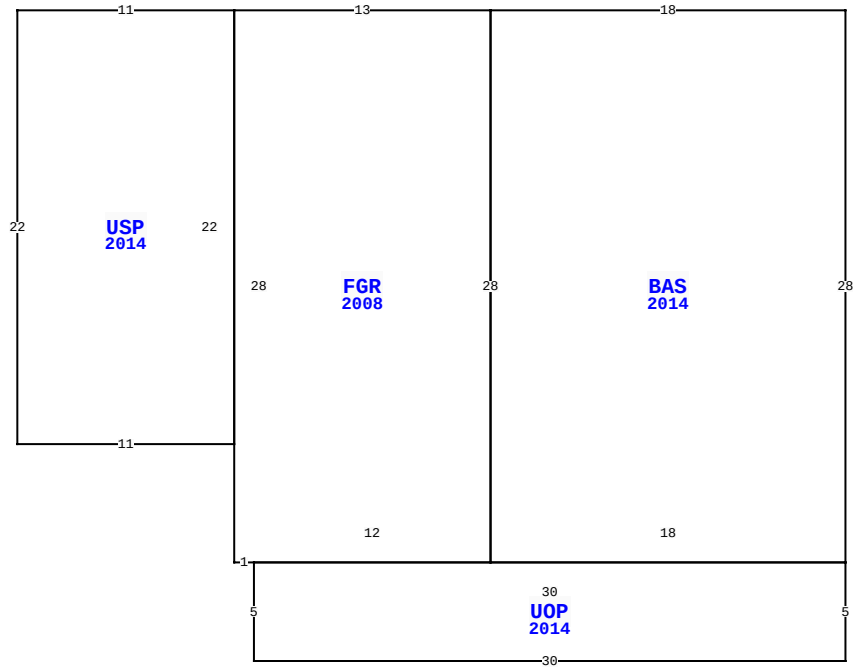

55123 BIRCH CT, CALLAHAN

BLD DATE		LGL DATE	
XF DATE		LAND DATE	03/31/2025 MLU
INC DATE		AG DATE	

VALUATION SUMMARY

VALUATION BY		STANDARD
Tax Group: 6	Tax Dist:	
BUILDING MARKET VALUE		316,752
TOTAL MARKET OB/XF VALUE		30,656
TOTAL LAND VALUE - MARKET		50,000
TOTAL MARKET VALUE		397,408
SOH/AGL Deduction		152,197
ASSESSED VALUE		245,211
TOTAL EXEMPTION VALUE	HX HB WX SX	105,722
BASE TAXABLE VALUE		139,489
TOTAL JUST VALUE		397,408
NCON VALUE		0
INCOME VALUE		
PREVIOUS YEAR MKT VALUE		377,095

PERMIT NUM	DESCRIPTION	AMT	ISSUED
C19471	CO ISSUED	0	02/01/2007
B19471	NEW CONSTR	157,014	02/01/2007
P12149	OTHER	0	02/01/2007
R10105	REPAIR/RRF	5,200	02/01/2007

SALES DATA

OFF RECORD Number	DATE	TYPE INST	Q U	V I	RSN CD	SALE PRICE
1466/1703	12/21/2006	WD	Q	V	06	100
GRANTOR: BARNES JANETTE M						
GRANTEE: CLAXTON W DOYLE & P						
0768/0036	8/09/1996	WD	U	V	09	72,000
GRANTOR: MCKENDREE HAROLD E						
GRANTEE: BARNES JANETTE M						

BUILDING NOTES

BUILDING DIMENSIONS

BAS=[YR=2014] W18 FGR=[YR=2008] W13 USP=[YR=2014] W11 S22 E11 N22$ S28 E1 UOP=[YR=2014] S5 E30 N5 W30$ E12 N28$ S28 E18 N28$.

EXTRA FEATURES

L N	OB/XF CODE	DESCRIPTION	BLD	CAP	L	W	UNITS	UT	Adj R	ADJ UNIT PRICE	ORIG COND	YEAR ON	YEAR ACTUAL	Q	% COND	OB/XF MKT VALUE	NOTES

LAND DESCRIPTION

TOTAL OB/XF 0

L N	USE CODE	CLS	LAND USE DESCRIPTION	CAP	R D	LOC ZONE	FRONT	DEPTH	TOT LND UTS	UNIT TYPE	D T	DPTH FACT	% COND	TOT ADJ	UNIT PRICE	ADJ UNIT PRICE	LAND VALUE	OTHER ADJUSTMENTS AND NOTES	YEAR	DENSITY	DECL	FRZ	YR	CONSRV

REVIEW DATE 10/28/2019 BY KBA Total Acres: 0.00 Total Land Value: 50,000 Market: 0 Agricultural: 0 Common: 50,000 PRINTED 07/30/2025 BY SYS