LOT 164
IN OR 1912/1310
TIMBER CREEK PLANTATION #3

MICHELS BRUCE & PAULITA
76901 TIMBERCREEK BLVD
YULEE, FL 32097

2025

11-2N-26-2052-0164-0000

NASSAU COUNTY PROPERTY

BUILDING CHARACTERISTICS

ELEMENT	CD	CONSTRUCTION
Exterior Wall	05	AVERAGE 80
Exterior Wall	16	WD FR STUC 20
Roof Structur	03	GABLE/HIP 100
Roof Cover	03	COMP SHNGL 100
Interior Wall	05	DRYWALL 100
Interior Floo	08	SHT VINYL 50
Interior Floo	14	CARPET 50
Air Condition	03	CENTRAL 100
Heating Type	04	AIR DUCTED 100
Bedrooms		4 100
Bathrooms		2.5 100
Frame	02	WOOD FRAME 100
Stories	2.	2. 100
Units		0 100
Occupancy	00	NONE 100
Quality	03	Quality Level 03
DOR CODE	0100	SINGLE FAMILY
MAP NUM		MKT AREA 05
NEIGHBORHOOD/LOC	5005.00	

AREA TYPE	TOTAL GROSS AREA	PCT OF BASE	YEAR	TOT ADJ AREA	SUBAREA MARKET VALUE
BAS	1,574	100	2014	1,574	138,657
FGR	462	55	2014	254	22,375
FOP	48	30	2014	14	1,234
FSP	240	40	2021	96	8,457
FUS	1,876	100	2014	1,876	165,261
TOTALS	4,200			3,814	335,984

MARKET ADJUSTMENTS

TYPE	MDL	EFF. AREA	TOT ADJ PTS	EFF. BASE RATE	REPL. COST NEW	AYB	EYB	ECON	FNCT		NORM	% COND
0100	01	3,814	92.3400	92.34	352,185	2014	2014	0	0	0	4.60	95.40

1 SINGLE FAM – 100% - 2020 Heated Area: 3450 HX Base Yr

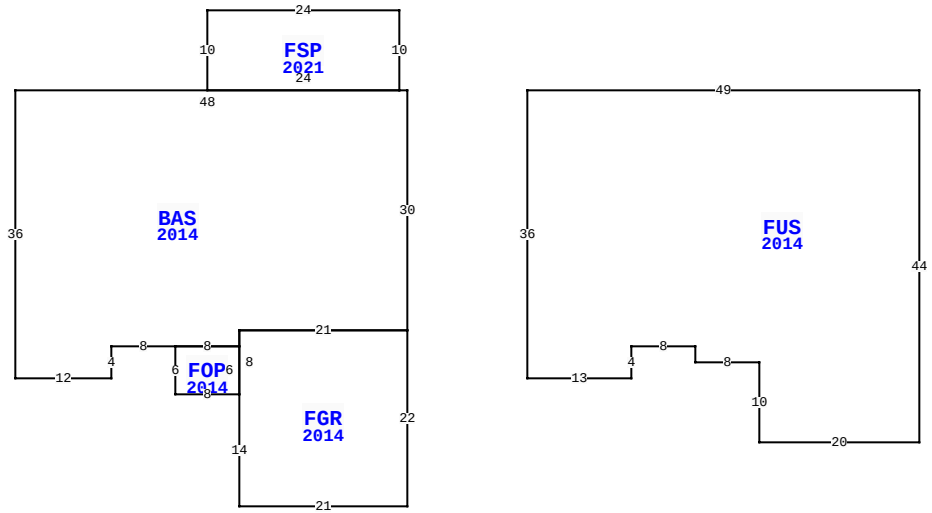

76901 TIMBERCREEK BLVD, YULEE

BLD DATE		LGL DATE	
XF DATE		LAND DATE	
INC DATE		AG DATE	

NASSAU COUNTY PROPERTY — VALUATION SUMMARY

VALUATION BY		STANDARD
Tax Group: 4	Tax Dist:	
BUILDING MARKET VALUE		335,984
TOTAL MARKET OB/XF VALUE		35,856
TOTAL LAND VALUE - MARKET		55,000
TOTAL MARKET VALUE		426,840
SOH/AGL Deduction		91,537
ASSESSED VALUE		335,303
TOTAL EXEMPTION VALUE	13	335,303
BASE TAXABLE VALUE		0
TOTAL JUST VALUE		426,840
NCON VALUE		0
INCOME VALUE		
PREVIOUS YEAR MKT VALUE		412,216

PERMIT NUM	DESCRIPTION	AMT	ISSUED
20000431	SWIM POOL	41,974	01/15/2020
B1328022	CO ISSUED	0	04/01/2014
B1328022	NEW CONSTR	397,012	11/01/2013

SALES DATA

OFF RECORD Number	DATE	TYPE INST	Q / U	V / I	RSN CD	SALE PRICE
1912/1310	4/02/2014	SW	Q	I	02	260,800
GRANTOR: KB HOME JACKSONVILLE						
GRANTEE: MICHELS BRUCE & PAU						
1731/1512	3/31/2011	WD	U	I	30	1,920,000
GRANTOR: TIMBER CREEK II LLC						
GRANTEE: KB HOME JACKSONVILL						

BUILDING NOTES

BUILDING DIMENSIONS

BAS=[YR=2014] W1 FSP=[YR=2021] N10 W24 S10 E24$ W48 S36 E12 N4 E8 FOP=[YR=2014] S6 E8 FGR=[YR=2014] S14 E21 N22 W21 S8$ N6 W8$ E8 N2 E21 N30$ PTR=E15 FUS=[YR=2014] E49 S44 W20 N10 W8 N2 W8 S4 W13 N36$ W15$.

EXTRA FEATURES

LN	OB/XF CODE	DESCRIPTION	BLD	CAP	L	W	UNITS	UT	Adj R	ADJ UNIT PRICE	ORIG COND	YEAR ON	YEAR ACTUAL	Q	% COND	OB/XF MKT VALUE	NOTES
1	0811	CONCRETE B	0	100	0	0	1,130.00	SF	5.20	5.20	100	2014	2014	3	94	5,523	
2	0861	POOL GUNIT	0	100	0	0	267.00	SF	85.00	85.00	100	2021	2021	3	93	21,106	
3	0855	CONC PAVER	0	100	0	0	932.00	SF	10.00	10.00	100	2021	2021	3	99	9,227	

LAND DESCRIPTION

TOTAL OB/XF 35,856

LN	USE CODE	CLS	LAND USE DESCRIPTION	CAP	RD	LOC ZONE	FRONT	DEPTH	TOT LND UTS	UNIT TYPE	DT	DPTH FACT	% COND	TOT ADJ	UNIT PRICE	ADJ UNIT PRICE	LAND VALUE	OTHER ADJUSTMENTS AND NOTES	YEAR	DENSITY	DECL	FRZ	YR	CONSRV
1	000100	C	RES	100		PUD	0.00	0.00	1.00	LT		1.00	1.00	1.00	55,000.00	55,000.00	55,000							

REVIEW DATE 10/20/2021 BY KBA Total Acres: 0.00 Total Land Value: 55,000 Market: 0 Agricultural: 0 Common: 55,000 PRINTED 07/30/2025 BY SYS