LOT 212
TIMBER CREEK PLANTATION #1
PB 6/394

HALL BRIAN
76297 DEERWOOD DRIVE
YULEE, FL 32097

2025

11-2N-26-2050-0212-0000

NASSAU COUNTY PROPERTY

BUILDING CHARACTERISTICS

ELEMENT	CD	CONSTRUCTION
Exterior Wall	16	WD FR STUC 100
Roof Structur	03	GABLE/HIP 100
Roof Cover	03	COMP SHNGL 100
Interior Wall	05	DRYWALL 100
Interior Floo	14	CARPET 70
Interior Floo	12	HARDWOOD 30
Air Condition	03	CENTRAL 100
Heating Type	04	AIR DUCTED 100
Bedrooms		3 100
Bathrooms		2 100
Frame	02	WOOD FRAME 100
Stories	1.	1. 100
Units		0 100
Occupancy	00	NONE 100
Quality	03	Quality Level 03
DOR CODE	0100	SINGLE FAMILY
MAP NUM		MKT AREA 05
NEIGHBORHOOD/LOC	5005.00	

AREA TYPE	TOTAL GROSS AREA	PCT OF BASE	YEAR	TOT ADJ AREA	SUBAREA MARKET VALUE
BAS	1,962	100	2006	1,962	191,593
FGR	744	55	2006	409	39,940
FOP	10	30	2006	3	293
FOP	165	30	2006	50	4,883
PTO	180	5	2026	9	879
TOTALS	3,061			2,433	237,587

MARKET ADJUSTMENTS

TYPE	MDL	EFF. AREA	TOT ADJ PTS	EFF. BASE RATE	REPL. COST NEW	AYB	EYB	ECON	FNCT		NORM	% COND
0100	01	2,433	107.3100	107.31	261,085	2006	2006	0	0	0	9.00	91.00

1 SINGLE FAM – 100% - 2020 Heated Area: 1962 HX Base Yr 2020

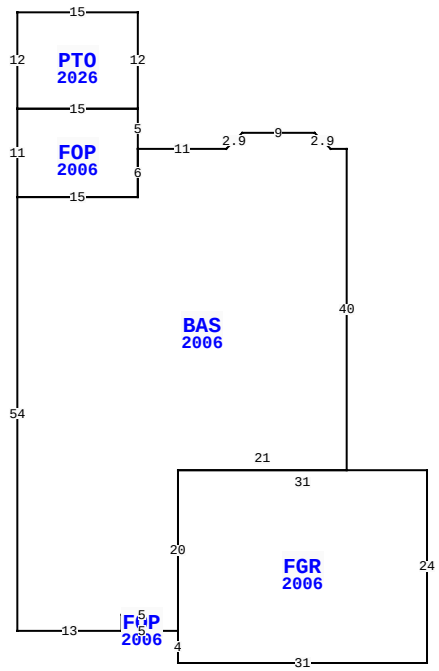

76297 DEERWOOD DR, YULEE

BLD DATE	02/05/2013 KK	LGL DATE	
XF DATE		LAND DATE	
INC DATE		AG DATE	

VALUATION SUMMARY

VALUATION BY		STANDARD
Tax Group: 4	Tax Dist:	
BUILDING MARKET VALUE		237,587
TOTAL MARKET OB/XF VALUE		3,478
TOTAL LAND VALUE - MARKET		55,000
TOTAL MARKET VALUE		296,065
SOH/AGL Deduction		130,379
ASSESSED VALUE		165,686
TOTAL EXEMPTION VALUE	HX HB	50,722
BASE TAXABLE VALUE		114,964
TOTAL JUST VALUE		296,065
NCON VALUE		0
INCOME VALUE		
PREVIOUS YEAR MKT VALUE		284,617

PERMIT NUM	DESCRIPTION	AMT	ISSUED
C16952	CO ISSUED	149,472	04/01/2006
E17193	ELEC OTHER	1,500	04/01/2006
M11411	MECH OTHER	0	04/01/2006
B16952	NEW CONSTR	149,472	04/01/2006

SALES DATA

OFF RECORD Number	DATE	TYPE INST	Q U	V I	RSN CD	SALE PRICE
2276/1732	5/23/2019	WD	Q	I	01	237,200
GRANTOR: GREEN SCOTT L & JERI						
GRANTEE: HALL BRIAN						
1434/1916	8/04/2006	WD	Q	I		292,600
GRANTOR: KB HOME JACKSONVILLE						
GRANTEE: GREEN SCOTT L & JER						

BUILDING NOTES

BUILDING DIMENSIONS

BAS=[YR=2006;ORIG=0,0] W2 U2L2 W9 D2L2 W11 S6 W15 S54 E13 N2 E5 S2 E2 N20 E21 N40 $
FGR=[YR=2006;ORIG=-21,60] S4 E31 N24 W31 S20 $
FOP=[YR=2006;ORIG=-26,0] N5 W15 S11 E15 N6 $
FOP=[YR=2006;ORIG=-28,60] E5 N2 W5 S2 $
PTO=[YR=2026;ORIG=-41,-5] E15 N12 W15 S12 $
.

EXTRA FEATURES

LN	OB/XF CODE	DESCRIPTION	BLD	CAP	L	W	UNITS	UT	Adj R	ADJ UNIT PRICE	ORIG COND	YEAR ON	YEAR ACTUAL	Q	% COND	OB/XF MKT VALUE	NOTES
1	0812	CONCRETE C	0	100	0	0	1,011.00	SF	4.00	4.00	100	2006	2006	3	86	3,478	

LAND DESCRIPTION

TOTAL OB/XF 3,478

LN	USE CODE	CLS	LAND USE DESCRIPTION	CAP	RD	LOC ZONE	FRONT	DEPTH	TOT LND UTS	UNIT TYPE	DT	DPTH FACT	% COND	TOT ADJ	UNIT PRICE	ADJ UNIT PRICE	LAND VALUE	OTHER ADJUSTMENTS AND NOTES	YEAR	DENSITY	DECL	FRZ	YR	CONSRV
1	000100	C	RES	100	0003	PUD	0.00	0.00	1.00	LT		1.00	1.00	1.00	55,000.00	55,000.00	55,000							

REVIEW DATE 05/12/2019 BY KBA Total Acres: 0.00 Total Land Value: 55,000 Market: 0 Agricultural: 0 Common: 55,000 PRINTED 07/30/2025 BY SYS