LOT 177
TIMBER CREEK PLANTATION #1
PB 6/394

FKH SFR N LP
1850 PARKWAY PLACE
MARIETTA, GA 32205

2025

11-2N-26-2050-0177-0000

NASSAU COUNTY PROPERTY

BUILDING CHARACTERISTICS

ELEMENT	CD	CONSTRUCTION
Exterior Wall	16	WD FR STUC 100
Roof Structur	03	GABLE/HIP 100
Roof Cover	03	COMP SHNGL 100
Interior Wall	05	DRYWALL 100
Interior Floo	14	CARPET 80
Interior Floo	11	CLAY TILE 20
Air Condition	03	CENTRAL 100
Heating Type	04	AIR DUCTED 100
Bedrooms		4 100
Bathrooms		2.5 100
Frame	02	WOOD FRAME 100
Stories	2.	2. 100
Units		0 100
Occupancy	00	NONE 100
Quality	03	Quality Level 03

DOR CODE 0100 SINGLE FAMILY
MAP NUM | MKT AREA 05
NEIGHBORHOOD/LOC 5005.00

AREA TYPE	TOTAL GROSS AREA	PCT OF BASE	YEAR	TOT ADJ AREA	SUBAREA MARKET VALUE
BAS	1,281	100	2006	1,281	117,538
FGR	717	55	2006	394	36,152
FOP	56	30	2006	17	1,560
FOP	110	30	2007	33	3,028
FUS	1,564	100	2006	1,564	143,505
PTO	187	5	2006	9	825
TOTALS	3,915			3,298	302,609

MARKET ADJUSTMENTS

TYPE	MDL	EFF. AREA	TOT ADJ PTS	EFF. BASE RATE	REPL. COST NEW	AYB	EYB	ECON	FNCT		NORM	% COND
0100	01	3,298	100.8320	100.83	332,537	2006	2006	0	0	0	9.00	91.00

1 SINGLE FAM – 0% - 2024 Heated Area: 2845 HX Base Yr

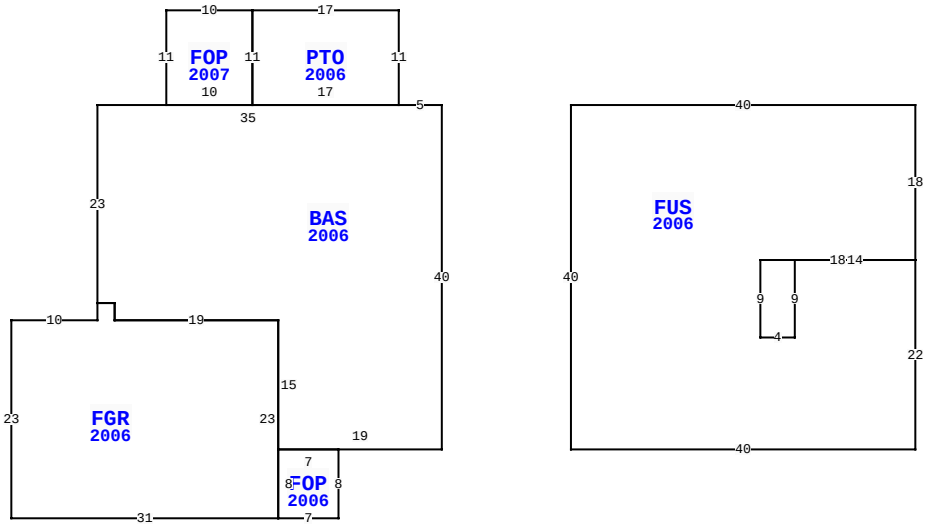

76112 DEERWOOD DR, YULEE

BLD DATE	02/05/2013 KK	LGL DATE	
XF DATE		LAND DATE	
INC DATE		AG DATE	

VALUATION SUMMARY

VALUATION BY	STANDARD
Tax Group: 4	Tax Dist:
BUILDING MARKET VALUE	302,609
TOTAL MARKET OB/XF VALUE	7,375
TOTAL LAND VALUE - MARKET	55,000
TOTAL MARKET VALUE	364,984
SOH/AGL Deduction	0
ASSESSED VALUE	364,984
TOTAL EXEMPTION VALUE	0
BASE TAXABLE VALUE	364,984
TOTAL JUST VALUE	364,984
NCON VALUE	0
INCOME VALUE	
PREVIOUS YEAR MKT VALUE	351,745

PERMIT NUM	DESCRIPTION	AMT	ISSUED
M10928	MECH OTHER	0	01/01/2006
E16548	ELEC OTHER	1,500	01/01/2006
P10421	OTHER	0	12/01/2005
C16254	CO ISSUED	205,878	10/01/2005
B16254	NEW CONSTR	205,878	10/01/2005
R08353	REPAIR/RRF	2,000	10/01/2005

SALES DATA

OFF RECORD Number	DATE	TYPE INST	Q / U	V / I	RSN CD	SALE PRICE
2647/1280	6/13/2023	SW	U	I	11	100
GRANTOR: FKH SFR L LP						
GRANTEE: FKH SFR N LP						
2578/1774	7/13/2022	WD	U	I	37	415,000
GRANTOR: JOHNSON MATTHEW A & N						
GRANTEE: FKH SFR L LP						

BUILDING NOTES

BUILDING DIMENSIONS

BAS=[YR=2006] W5 PTO=[YR=2006] N11 W17 FOP=[YR=2007] W10 S11 E10 N11$ S11 E17$ W35 S23 FGR=[YR=2006] S2 W10 S23 E31 FOP=[YR=2006] E7 N8 W7 S8$ N23 W19 N2 W2$ E2 S2 E19 S15 E19 N40$ PTR=E15 FUS=[YR=2006] E40 S18 W18 S9 E4 N9 E14 S22 W40 N40 $ W15 $.

EXTRA FEATURES

LN	OB/XF CODE	DESCRIPTION	BLD	CAP	L	W	UNITS	UT	Adj R	ADJ UNIT PRICE	ORIG COND	YEAR ON	YEAR ACTUAL	Q	% COND	OB/XF MKT VALUE	NOTES
1	0811	CONCRETE B	0	0	0	0	958.00	SF	5.20	5.20	100	2006	2006	3	86	4,284	
2	0462	ST/AL FNC	0	0	0	0	644.00	SF	10.00	10.00	100	2008	2008	3	48	3,091	

LAND DESCRIPTION

TOTAL OB/XF 7,375

LN	USE CODE	CLS	LAND USE DESCRIPTION	CAP	RD	LOC ZONE	FRONT	DEPTH	TOT LND UTS	UNIT TYPE	DT	DPTH FACT	% COND	TOT ADJ	UNIT PRICE	ADJ UNIT PRICE	LAND VALUE	OTHER ADJUSTMENTS AND NOTES	YEAR	DENSITY	DECL	FRZ	YR	CONSRV
1	000134	C	RES POND	0	0003	PUD	0.00	0.00	1.00	LT		1.00	1.00	1.00	55,000.00	55,000.00	55,000							

REVIEW DATE 05/12/2019 BY KBA Total Acres: 0.00 Total Land Value: 55,000 Market: 0 Agricultural: 0 Common: 55,000 PRINTED 07/30/2025 BY SYS