LOT 31
TIMBER CREEK PLANTATION #1
PB 6/394

MOHLER LIVING TRUST/MOHLER JEFFREY L TRUSTEE
76010 TIDEVIEW LN
YULEE, FL 32097

2025

11-2N-26-2050-0031-0000

NASSAU COUNTY PROPERTY

BUILDING CHARACTERISTICS

ELEMENT	CD	CONSTRUCTION
Exterior Wall	16	WD FR STUC 100
Roof Structur	03	GABLE/HIP 100
Roof Cover	03	COMP SHNGL 100
Interior Wall	05	DRYWALL 100
Interior Floo	14	CARPET 60
Interior Floo	15	HARDTILE 40
Air Condition	03	CENTRAL 100
Heating Type	04	AIR DUCTED 100
Bedrooms		5 100
Bathrooms		2.5 100
Frame	02	WOOD FRAME 100
Stories	2.	2. 100
Units		0 100
Occupancy	00	NONE 100
Quality	03	Quality Level 03

DOR CODE 0100 SINGLE FAMILY
MAP NUM | MKT AREA 05
NEIGHBORHOOD/LOC 5005.00

AREA TYPE	TOTAL GROSS AREA	PCT OF BASE	YEAR	TOT ADJ AREA	SUBAREA MARKET VALUE
BAS	1,708	100	2005	1,708	153,306
FGR	420	55	2005	231	20,734
FOP	108	30	2005	32	2,872
FUS	1,792	100	2005	1,792	160,847
PTO	200	5	2005	10	898
TOTALS	4,228			3,773	338,656

MARKET ADJUSTMENTS

TYPE	MDL	EFF. AREA	TOT ADJ PTS	EFF. BASE RATE	REPL. COST NEW	AYB	EYB	ECON	FNCT		NORM	% COND
0100	01	3,773	99.1800	99.18	374,206	2005	2005	0	0	0	9.50	90.50

1 SINGLE FAM – 100% - 2023 Heated Area: 3500 HX Base Yr

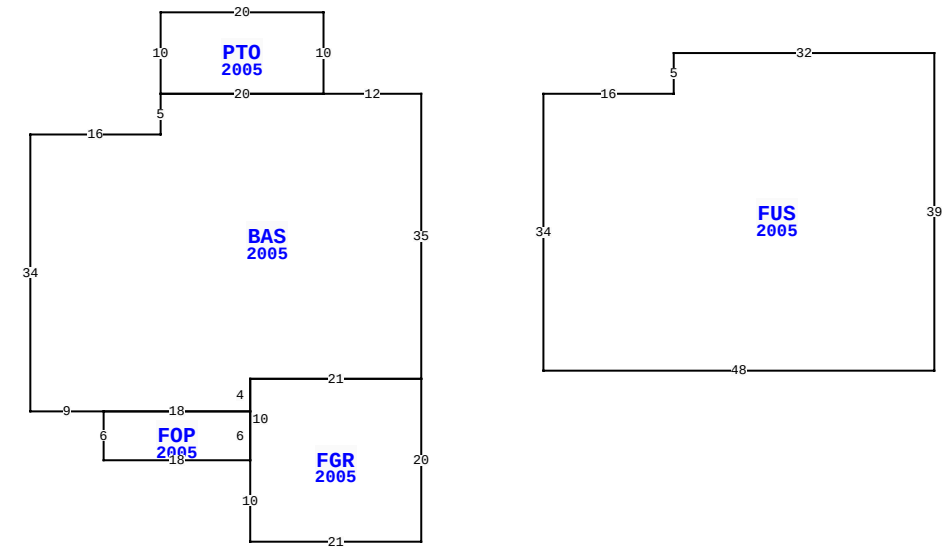

76010 TIDEVIEW LN, YULEE

BLD DATE		LGL DATE	
XF DATE		LAND DATE	
INC DATE		AG DATE	

NASSAU COUNTY PROPERTY — VALUATION SUMMARY

VALUATION BY		STANDARD
Tax Group: 4	Tax Dist:	
BUILDING MARKET VALUE		338,656
TOTAL MARKET OB/XF VALUE		3,942
TOTAL LAND VALUE - MARKET		55,000
TOTAL MARKET VALUE		397,598
SOH/AGL Deduction		319
ASSESSED VALUE		397,279
TOTAL EXEMPTION VALUE	13	397,279
BASE TAXABLE VALUE		0
TOTAL JUST VALUE		397,598
NCON VALUE		0
INCOME VALUE		
PREVIOUS YEAR MKT VALUE		389,631

PERMIT NUM	DESCRIPTION	AMT	ISSUED
21005965	REPAIR/RRF	17,000	05/11/2021
M09966	MECH OTHER	0	07/01/2005
E0514986	ELEC OTHER	1,500	05/01/2005
R0507582	REPAIR/RRF	2,000	05/01/2005
B0515158	NEW CONSTR	240,495	05/01/2005
P0509477	OTHER	0	05/01/2005

SALES DATA

OFF RECORD Number	DATE	TYPE INST	Q / U	V / I	RSN CD	SALE PRICE
2609/1265	7/01/2022	WD	U	I	11	100
GRANTOR: MOHLER JEFFREY L & CA						
GRANTEE: MOHLER LIVING TRUST						
1586/0355	9/22/2008	WD	Q	I	05	196,000
GRANTOR: CM REO TRUST						
GRANTEE: MOHLER JEFFREY L &						

BUILDING NOTES

BUILDING DIMENSIONS

BAS=[YR=2005] W12 PTO=[YR=2005] N10 W20 S10 E20$ W20 S5 W16 S34 E9 FOP=[YR=2005] S6 E18 FGR=[YR=2005] S10 E21 N20 W21 S10$ N6 W18$ E18 N4 E21 N35$ PTR=E15 FUS=[YR=2005] E16 N5 E32 S39 W48 N34$ W15$.

EXTRA FEATURES

LN	OB/XF CODE	DESCRIPTION	BLD	CAP	L	W	UNITS	UT	Adj R	ADJ UNIT PRICE	ORIG COND	YEAR ON	YEAR ACTUAL	Q	% COND	OB/XF MKT VALUE	NOTES
1	0811	CONCRETE B	0	100	0	0	681.00	SF	5.20	5.20	100	2005	2005	3	84	2,975	
2	0810	CONCRETE A	0	100	0	0	160.00	SF	6.50	6.50	100	2013	2013	3	93	967	

LAND DESCRIPTION

TOTAL OB/XF 3,942

LN	USE CODE	CLS	LAND USE DESCRIPTION	CAP	RD	LOC ZONE	FRONT	DEPTH	TOT LND UTS	UNIT TYPE	DT	DPTH FACT	% COND	TOT ADJ	UNIT PRICE	ADJ UNIT PRICE	LAND VALUE	OTHER ADJUSTMENTS AND NOTES	YEAR	DENSITY	DECL	FRZ	YR	CONSRV
1	000100	C	RES	100	0003	PUD	0.00	0.00	1.00	LT		1.00	1.00	1.00	55,000.00	55,000.00	55,000							

REVIEW DATE 10/18/2021 BY KB Total Acres: 0.00 Total Land Value: 55,000 Market: 0 Agricultural: 0 Common: 55,000 PRINTED 07/30/2025 BY SYS