PT OF SE1/4 OF NE1/4 OF
SEC 10-3N-23E IN OR 1936/1626
& OR 2465/1998

HENDRICKSON PEARL D & DEREK G
27777 CONNER NELSON RD
HILLIARD, FL 32046-9803

2025

10-3N-23-0000-0003-0050

NASSAU COUNTY PROPERTY

BUILDING CHARACTERISTICS

ELEMENT	CD	CONSTRUCTION
Exterior Wall	15	CONC BLOCK 100
Roof Structur	03	GABLE/HIP 100
Roof Cover	03	COMP SHNGL 100
Interior Wall	05	DRYWALL 100
Interior Floo	11	CLAY TILE 100
Air Condition	03	CENTRAL 100
Heating Type	04	AIR DUCTED 100
Bedrooms		3 100
Bathrooms		2 100
Frame	03	MASONRY 100
Stories	1.	1. 100
Units		0 100
BUD8 Adjustme	04	DIST 01 100
Occupancy	00	NONE 100
Quality	03	Quality Level 03

DOR CODE 0100 SINGLE FAMILY
MAP NUM | MKT AREA 09
NEIGHBORHOOD/LOC 9001.00

AREA TYPE	TOTAL GROSS AREA	PCT OF BASE	YEAR	TOT ADJ AREA	SUBAREA MARKET VALUE
BAS	1,770	100	1993	1,770	153,477
FCP	198	25	1993	50	4,336
FCP	480	25	2024	120	10,405
FOP	128	30	1993	38	3,295
TOTALS	2,576			1,978	171,513

MARKET ADJUSTMENTS

TYPE	MDL	EFF. AREA	TOT ADJ PTS	EFF. BASE RATE	REPL. COST NEW	AYB	EYB	ECON	FNCT		NORM	% COND
0100	01	1,978	109.7600	109.76	217,105	1982	1982	0	0	0	21.00	79.00

1 SINGLE FAM – 100% - 2013 Heated Area: 1770 HX Base Yr 2013

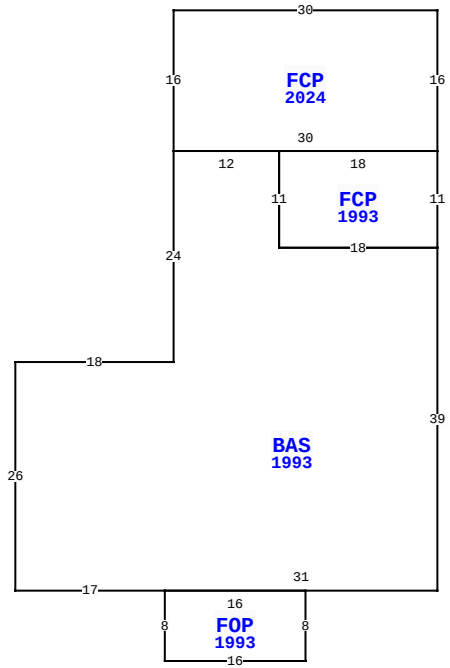

27777 CONNER NELSON RD, HILLIARD

BLD DATE		LGL DATE	
XF DATE		LAND DATE	05/09/2025 MLU
INC DATE		AG DATE	

VALUATION SUMMARY

VALUATION BY		STANDARD
Tax Group: 4	Tax Dist:	
BUILDING MARKET VALUE		242,476
TOTAL MARKET OB/XF VALUE		5,678
TOTAL LAND VALUE - MARKET		100,230
TOTAL MARKET VALUE		348,384
SOH/AGL Deduction		107,215
ASSESSED VALUE		241,169
TOTAL EXEMPTION VALUE	HX HB	50,722
BASE TAXABLE VALUE		190,447
TOTAL JUST VALUE		348,384
NCON VALUE		0
INCOME VALUE		
PREVIOUS YEAR MKT VALUE		373,673

PERMIT NUM	DESCRIPTION	AMT	ISSUED
R980939	REPAIR/RRF	0	04/01/1998

SALES DATA

OFF RECORD Number	DATE	TYPE INST	Q / U	V / I	RSN CD	SALE PRICE
2592/1109	9/23/2022	QC	U	V	11	100
GRANTOR: HENDRICKSON DEREK GIL						
GRANTEE: HENDRICKSON DEREK G						
2465/1998	5/27/2021	QC	U	I	11	100
GRANTOR: HENDRICKSON ISABELLE						
GRANTEE: HENDRICKSON DEREK G						

BUILDING NOTES

BUILDING DIMENSIONS

BAS=[YR=1993;ORIG=-18,0] W12 S24 W18 S26 E17 E31 N39 W18 N11 $
FCP=[YR=1993;ORIG=0,0] W18 S11 E18 N11 $
FOP=[YR=1993;ORIG=-31,50] S8 E16 N8 W16 $
FCP=[YR=2024;ORIG=0,-16] S16 W30 N16 E30 $
.

EXTRA FEATURES

LN	OB/XF CODE	DESCRIPTION	BLD	CAP	L	W	UNITS	UT	Adj R	ADJ UNIT PRICE	ORIG COND	YEAR ON	YEAR ACTUAL	Q	% COND	OB/XF MKT VALUE	NOTES
1	0812	CONCRETE C	0	100	0	0	1,145.00	SF	4.00	4.00	100	1982	1982	3	35	1,603	
2	0500	FP-PRE FAB	0	100	0	0	1.00	UT	3,500.00	3,500.00	100	1982	1982	3	49	1,715	
3	2701	QUONSET GD	0	100	19	18	342.00	SF	15.00	15.00	100	2001	2001	3	46	2,360	

LAND DESCRIPTION

TOTAL OB/XF 5,678

LN	USE CODE	CLS	LAND USE DESCRIPTION	CAP	RD	LOC ZONE	FRONT	DEPTH	TOT LND UTS	UNIT TYPE	DT	DPTH FACT	% COND	TOT ADJ	UNIT PRICE	ADJ UNIT PRICE	LAND VALUE	OTHER ADJUSTMENTS AND NOTES	YEAR	DENSITY	DECL	FRZ	YR	CONSRV
1	000100	C	RES	100	0006	OR	0.00	0.00	3.00	AC		1.00	1.00	1.00	19,500.00	19,500.00	58,500							
2	000100	C	RES	100		OR	0.00	0.00	2.14	AC		1.00	1.00	1.00	19,500.00	19,500.00	41,730							

REVIEW DATE 02/06/2024 BY WWA Total Acres: 5.14 Total Land Value: 100,230 Market: 0 Agricultural: 0 Common: 100,230 PRINTED 07/30/2025 BY SYS

PT OF SE1/4 OF NE1/4 OF
SEC 10-3N-23E IN OR 1936/1626
& OR 2465/1998

HENDRICKSON PEARL D & DEREK G
27777 CONNER NELSON RD
HILLIARD, FL 32046-9803

2025

10-3N-23-0000-0003-0050

BUILDING CHARACTERISTICS

ELEMENT	CD	CONSTRUCTION
Exterior Wall	05	AVERAGE 100
Roof Structur	03	GABLE/HIP 100
Roof Cover	03	COMP SHNGL 100
Interior Wall	05	DRYWALL 100
Interior Floo	14	CARPET 100
Air Condition	01	NONE 100
Heating Type	02	CONVECTION 100
Bedrooms		0 100
Bathrooms		0 100
Frame	02	WOOD FRAME 100
Stories	1.	1. 100
Units		0 100
BUD8 Adjustme	04	DIST 01 100
Occupancy	00	NONE 100
Quality	03	Quality Level 03
DOR CODE	0100	SINGLE FAMILY
MAP NUM		MKT AREA 09
NEIGHBORHOOD/LOC	9001.00	

AREA TYPE	TOTAL GROSS AREA	PCT OF BASE	YEAR	TOT ADJ AREA	SUBAREA MARKET VALUE
BAS	384	100	1993	384	6,720
BAS	36	100	1998	36	630
BAS	400	100	1998	400	7,000
FOP	16	30	1998	5	88
TOTALS	836			825	14,438

MARKET ADJUSTMENTS

TYPE	MDL	EFF. AREA	TOT ADJ PTS	EFF. BASE RATE	REPL. COST NEW	AYB	EYB	ECON	FNCT		NORM	% COND
6500	01	825	94.6000	35.00	28,875	1985	1992	0	0	0	50.00	50.00

2 GARAGE RES – 100% - 2013 Heated Area: 820 HX Base Yr 2013

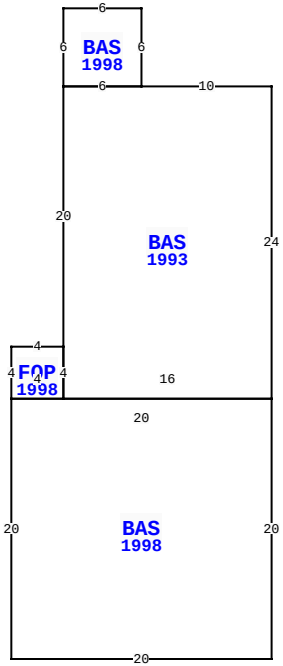

27777 CONNER NELSON RD, HILLIARD

BLD DATE		LGL DATE	
XF DATE		LAND DATE	05/09/2025 MLU
INC DATE		AG DATE	

NASSAU COUNTY PROPERTY

PAGE 2 of 4 4

VALUATION SUMMARY

VALUATION BY		STANDARD
Tax Group: 4	Tax Dist:	
BUILDING MARKET VALUE		242,476
TOTAL MARKET OB/XF VALUE		5,678
TOTAL LAND VALUE - MARKET		100,230
TOTAL MARKET VALUE		348,384
SOH/AGL Deduction		107,215
ASSESSED VALUE		241,169
TOTAL EXEMPTION VALUE	HX HB	50,722
BASE TAXABLE VALUE		190,447
TOTAL JUST VALUE		348,384
NCON VALUE		0
INCOME VALUE		
PREVIOUS YEAR MKT VALUE		373,673

PERMIT NUM	DESCRIPTION	AMT	ISSUED

SALES DATA

OFF RECORD Number	DATE	TYPE INST	Q / U	V / I	RSN CD	SALE PRICE
2592/1109	9/23/2022	QC	U	V	11	100
GRANTOR: HENDRICKSON DEREK GIL						
GRANTEE: HENDRICKSON DEREK G						
2465/1998	5/27/2021	QC	U	I	11	100
GRANTOR: HENDRICKSON ISABELLE						
GRANTEE: HENDRICKSON DEREK G						

BUILDING NOTES

BUILDING DIMENSIONS

BAS=[YR=1993] W10 BAS=[YR=1998] N6 W6 S6 E6$ W6 S20
FOP=[YR=1998] W4 S4 BAS=[YR=1998] S20 E20 N20 W20$ E4 N4 $ S4 E16 N24$.

EXTRA FEATURES

L N	OB/XF CODE	DESCRIPTION	BLD	CAP	L	W	UNITS	UT	Adj R	ADJ UNIT PRICE	ORIG COND	YEAR ON	YEAR ACTUAL	Q	% COND	OB/XF MKT VALUE	NOTES

LAND DESCRIPTION

TOTAL OB/XF 0

L N	USE CODE	CLS	LAND USE DESCRIPTION	CAP	R D	LOC ZONE	FRONT	DEPTH	TOT LND UTS	UNIT TYPE	D T	DPTH FACT	% COND	TOT ADJ	UNIT PRICE	ADJ UNIT PRICE	LAND VALUE	OTHER ADJUSTMENTS AND NOTES	YEAR	DENSITY	DECL	FRZ	YR	CONSRV

REVIEW DATE 02/06/2024 BY WWA Total Acres: 5.14 Total Land Value: 100,230 Market: 0 Agricultural: 0 Common: 100,230 PRINTED 07/30/2025 BY SYS

PT OF SE1/4 OF NE1/4 OF
SEC 10-3N-23E IN OR 1936/1626
& OR 2465/1998

HENDRICKSON PEARL D & DEREK G
27777 CONNER NELSON RD
HILLIARD, FL 32046-9803

2025

10-3N-23-0000-0003-0050

BUILDING CHARACTERISTICS

ELEMENT	CD	CONSTRUCTION
Exterior Wall	05	AVERAGE 100
Roof Structur	03	GABLE/HIP 100
Roof Cover	11	SLATE 100
Interior Wall	04	PLYWOOD 100
Interior Floo	09	PINE WOOD 90
Interior Floo	08	SHT VINYL 10
Air Condition	03	CENTRAL 100
Heating Type	04	AIR DUCTED 100
Bedrooms		3 100
Bathrooms		2 100
Frame	02	WOOD FRAME 100
Stories	0	0 100
Units		0 100
Quality	03	Quality Level 03
DOR CODE	0100	SINGLE FAMILY
MAP NUM		MKT AREA 09
NEIGHBORHOOD/LOC	9001.00	

AREA TYPE	TOTAL GROSS AREA	PCT OF BASE	YEAR	TOT ADJ AREA	SUBAREA MARKET VALUE
BAS	1,188	100	2012	1,188	34,214
UOP	396	25	2012	99	2,851
TOTALS	1,584			1,287	37,066

MARKET ADJUSTMENTS

TYPE	MDL	EFF. AREA	TOT ADJ PTS	EFF. BASE RATE	REPL. COST NEW	AYB	EYB	ECON	FNCT		NORM	% COND
0820	02	1,287	120.0000	96.00	123,552	1986	1986	0	0	0	70.00	30.00

3 M/H 93- – 0% - 2013 Heated Area: 1188 HX Base Yr 2013

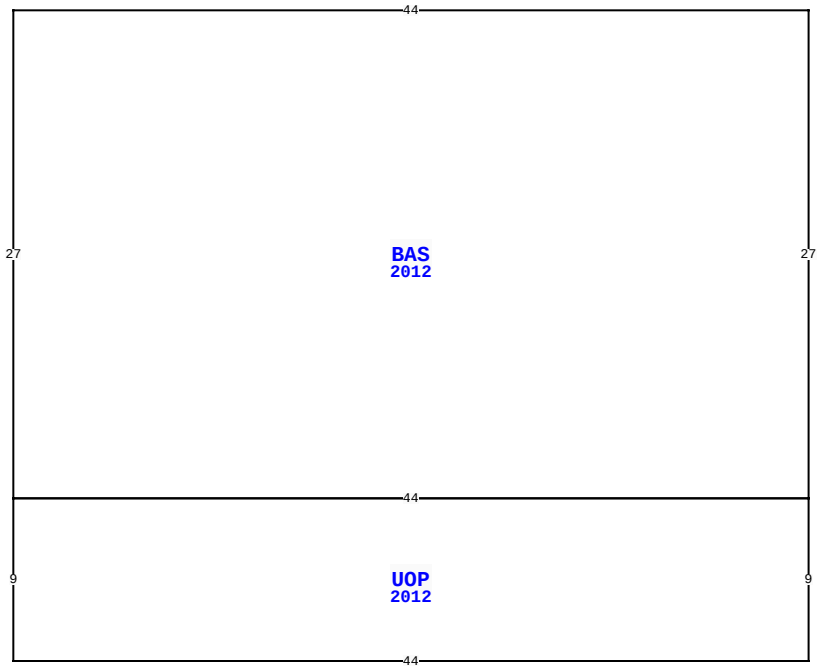

27777 CONNER NELSON RD, HILLIARD

BLD DATE		LGL DATE	
XF DATE		LAND DATE	05/09/2025 MLU
INC DATE		AG DATE	

NASSAU COUNTY PROPERTY

PAGE 3 of 4 4

VALUATION SUMMARY

VALUATION BY		STANDARD
Tax Group: 4	Tax Dist:	
BUILDING MARKET VALUE		242,476
TOTAL MARKET OB/XF VALUE		5,678
TOTAL LAND VALUE - MARKET		100,230
TOTAL MARKET VALUE		348,384
SOH/AGL Deduction		107,215
ASSESSED VALUE		241,169
TOTAL EXEMPTION VALUE	HX HB	50,722
BASE TAXABLE VALUE		190,447
TOTAL JUST VALUE		348,384
NCON VALUE		0
INCOME VALUE		
PREVIOUS YEAR MKT VALUE		373,673

PERMIT NUM	DESCRIPTION	AMT	ISSUED

SALES DATA

OFF RECORD Number	DATE	TYPE INST	Q U	V I	RSN CD	SALE PRICE
2592/1109	9/23/2022	QC	U	V	11	100
GRANTOR: HENDRICKSON DEREK GIL						
GRANTEE: HENDRICKSON DEREK G						
2465/1998	5/27/2021	QC	U	I	11	100
GRANTOR: HENDRICKSON ISABELLE						
GRANTEE: HENDRICKSON DEREK G						

BUILDING NOTES

BUILDING DIMENSIONS

BAS=[YR=2012] W44 S27 UOP=[YR=2012] S9 E44 N9 W44$ E44 N27$.

EXTRA FEATURES

L N	OB/XF CODE	DESCRIPTION	BLD	CAP	L	W	UNITS	UT	Adj R	ADJ UNIT PRICE	ORIG COND	YEAR ON	YEAR ACTUAL	Q	% COND	OB/XF MKT VALUE	NOTES

LAND DESCRIPTION

TOTAL OB/XF 0

L N	USE CODE	CLS	LAND USE DESCRIPTION	CAP	R D	LOC ZONE	FRONT	DEPTH	TOT LND UTS	UNIT TYPE	D T	DPTH FACT	% COND	TOT ADJ	UNIT PRICE	ADJ UNIT PRICE	LAND VALUE	OTHER ADJUSTMENTS AND NOTES	YEAR	DENSITY	DECL	FRZ	YR	CONSRV

REVIEW DATE 02/06/2024 BY WWA Total Acres: 5.14 Total Land Value: 100,230 Market: 0 Agricultural: 0 Common: 100,230 PRINTED 07/30/2025 BY SYS

PT OF SE1/4 OF NE1/4 OF
SEC 10-3N-23E IN OR 1936/1626
& OR 2465/1998

HENDRICKSON PEARL D & DEREK G
27777 CONNER NELSON RD
HILLIARD, FL 32046-9803

2025

10-3N-23-0000-0003-0050

NASSAU COUNTY PROPERTY

BUILDING CHARACTERISTICS

ELEMENT	CD	CONSTRUCTION
Exterior Wall	25	MOD METAL 100
Roof Structur	10	STEEL FRME 100
Roof Cover	12	MODULAR MT 100
Interior Wall	07	NONE 100
Interior Floo	03	CONC FINSH 100
Air Condition	01	NONE 100
Heating Type	01	NONE 100
Bedrooms		0 100
Bathrooms		0 100
Frame	05	STEEL 100
Quality	06	Quality Level 06

DOR CODE 0100 SINGLE FAMILY
MAP NUM | MKT AREA 09
NEIGHBORHOOD/LOC 9001.00

AREA TYPE	TOTAL GROSS AREA	PCT OF BASE	YEAR	TOT ADJ AREA	SUBAREA MARKET VALUE
BAS	840	100	2024	840	19,459
TOTALS	840			840	19,459

MARKET ADJUSTMENTS

TYPE	MDL	EFF. AREA	TOT ADJ PTS	EFF. BASE RATE	REPL. COST NEW	AYB	EYB	ECON	FNCT		NORM	% COND
6500	01	840	63.2500	23.40	19,656	2023	2023	0	0	0	1.00	99.00

4 GARAGE RES – 100% - 2024 Heated Area: 840 HX Base Yr 2013

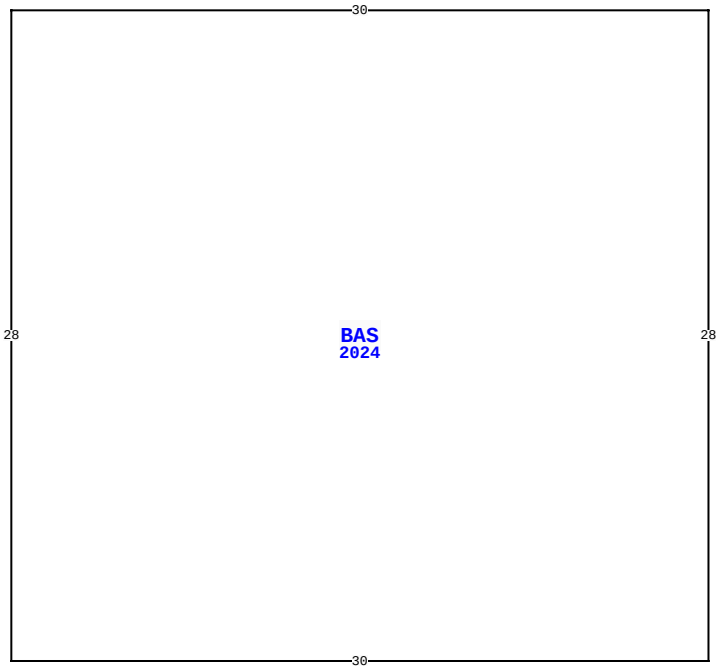

27777 CONNER NELSON RD, HILLIARD

BLD DATE		LGL DATE	
XF DATE		LAND DATE	05/09/2025 MLU
INC DATE		AG DATE	

VALUATION SUMMARY

VALUATION BY		STANDARD
Tax Group: 4	Tax Dist:	
BUILDING MARKET VALUE		242,476
TOTAL MARKET OB/XF VALUE		5,678
TOTAL LAND VALUE - MARKET		100,230
TOTAL MARKET VALUE		348,384
SOH/AGL Deduction		107,215
ASSESSED VALUE		241,169
TOTAL EXEMPTION VALUE	HX HB	50,722
BASE TAXABLE VALUE		190,447
TOTAL JUST VALUE		348,384
NCON VALUE		0
INCOME VALUE		
PREVIOUS YEAR MKT VALUE		373,673

PERMIT NUM	DESCRIPTION	AMT	ISSUED

SALES DATA

OFF RECORD Number	DATE	TYPE INST	Q / U	V / I	RSN CD	SALE PRICE
2592/1109	9/23/2022	QC	U	V	11	100
GRANTOR: HENDRICKSON DEREK GIL						
GRANTEE: HENDRICKSON DEREK G						
2465/1998	5/27/2021	QC	U	I	11	100
GRANTOR: HENDRICKSON ISABELLE						
GRANTEE: HENDRICKSON DEREK G						

BUILDING NOTES

BUILDING DIMENSIONS

BAS=[YR=2024;ORIG=50,12] E30 S28 W30 N28 $
.

EXTRA FEATURES

LN	OB/XF CODE	DESCRIPTION	BLD	CAP	L	W	UNITS	UT	Adj R	ADJ UNIT PRICE	ORIG COND	YEAR ON	YEAR ACTUAL	Q	% COND	OB/XF MKT VALUE	NOTES

LAND DESCRIPTION

TOTAL OB/XF 0

LN	USE CODE	CLS	LAND USE DESCRIPTION	CAP	RD	LOC ZONE	FRONT	DEPTH	TOT LND UTS	UNIT TYPE	DT	DPTH FACT	% COND	TOT ADJ	UNIT PRICE	ADJ UNIT PRICE	LAND VALUE	OTHER ADJUSTMENTS AND NOTES	YEAR	DENSITY	DECL	FRZ	YR	CONSRV

REVIEW DATE 02/06/2024 BY WWA Total Acres: 5.14 Total Land Value: 100,230 Market: 0 Agricultural: 0 Common: 100,230 PRINTED 07/30/2025 BY SYS