PT OF SE1/4 OF NE1/4
SEC 10-3N-23E IN OR 2704/39

HALL BENJAMIN DAVIS & LEANN MARIE
17107 TAZ DRIVE
HILLIARD, FL 32046

2025

10-3N-23-0000-0003-0040

NASSAU COUNTY PROPERTY

BUILDING CHARACTERISTICS

ELEMENT	CD	CONSTRUCTION
Exterior Wall	05	AVERAGE 100
Roof Structur	03	GABLE/HIP 100
Roof Cover	12	MODULAR MT 100
Interior Wall	05	DRYWALL 100
Interior Floo	14	CARPET 90
Interior Floo	11	CLAY TILE 10
Air Condition	03	CENTRAL 100
Heating Type	04	AIR DUCTED 100
Bedrooms		2 100
Bathrooms		1.5 100
Frame	02	WOOD FRAME 100
Stories	2.	2. 100
Units		0 100
Occupancy	00	NONE 100
Quality	05	Quality Level 05

DOR CODE 0100 SINGLE FAMILY
MAP NUM | MKT AREA 09
NEIGHBORHOOD/LOC 9001.00

AREA TYPE	TOTAL GROSS AREA	PCT OF BASE	YEAR	TOT ADJ AREA	SUBAREA MARKET VALUE
BAL	320	15	1999	48	4,639
BAS	576	100	1999	576	55,669
FST	128	55	1999	70	6,766
FUS	1,636	100	1999	1,636	158,116
PTO	128	5	1999	6	580
UCP	1,024	20	1999	205	19,813
UOP	228	20	1999	46	4,445
TOTALS	4,040			2,587	250,028

MARKET ADJUSTMENTS

TYPE	MDL	EFF. AREA	TOT ADJ PTS	EFF. BASE RATE	REPL. COST NEW	AYB	EYB	ECON	FNCT		NORM	% COND
0100	01	2,587	110.1408	110.14	284,932	1999	1999	0	0	0	12.25	87.75

1 SINGLE FAM – 100% - 2025 Heated Area: 2212 HX Base Yr 2025

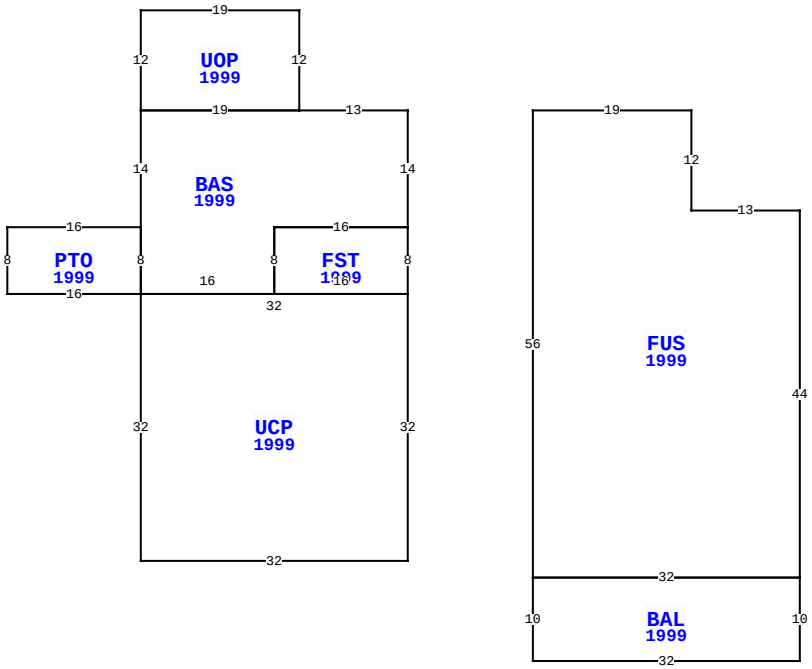

17107 TAZ DR, HILLIARD

BLD DATE		LGL DATE	
XF DATE		LAND DATE	05/21/2025 MLU
INC DATE		AG DATE	

NASSAU COUNTY PROPERTY — VALUATION SUMMARY

VALUATION BY		STANDARD
Tax Group: 4	Tax Dist:	
BUILDING MARKET VALUE		260,154
TOTAL MARKET OB/XF VALUE		0
TOTAL LAND VALUE - MARKET		53,865
TOTAL MARKET VALUE		314,019
SOH/AGL Deduction		0
ASSESSED VALUE		314,019
TOTAL EXEMPTION VALUE	HX HB	50,722
BASE TAXABLE VALUE		263,297
TOTAL JUST VALUE		314,019
NCON VALUE		0
INCOME VALUE		
PREVIOUS YEAR MKT VALUE		249,182

PERMIT NUM	DESCRIPTION	AMT	ISSUED
E984903	NEW CONSTR	0	06/01/1998
B9602808	NEW CONSTR	75,655	01/01/1996
B951888	XFOB	14,688	05/01/1995

SALES DATA

OFF RECORD Number	DATE	TYPE INST	Q / U	V / I	RSN CD	SALE PRICE
2704/39	3/22/2024	WD	Q	I	02	330,000
GRANTOR: CANTERBURY MIKEL & JE						
GRANTEE: HALL BENJAMIN DAVIS						
2550/1007	3/18/2022	WD	Q	I	01	285,000
GRANTOR: HENDRICKSON DEREK GIL						
GRANTEE: CANTERBURY MIKEL &						

BUILDING NOTES

BUILDING DIMENSIONS

BAS=[YR=1999] W13 UOP=[YR=1999] N12 W19 S12 E19 $ W19 S14
PTO=[YR=1999] W16 S8 E16 UCP=[YR=1999] S32 E32 N32
FST=[YR=1999] N8 W16 S8 E16 $ W32 $ N8 $ S8 E16 N8 E16 N14 $
PTR= E15 FUS=[YR=1999] E19 S12 E13 S44 BAL=[YR=1999] S10 W32
N10 E32$ W32 N56 $ W15 $.

EXTRA FEATURES

LN	OB/XF CODE	DESCRIPTION	BLD	CAP	L	W	UNITS	UT	Adj R	ADJ UNIT PRICE	ORIG COND	YEAR ON	YEAR ACTUAL	Q	% COND	OB/XF MKT VALUE	NOTES

LAND DESCRIPTION

TOTAL OB/XF 0

LN	USE CODE	CLS	LAND USE DESCRIPTION	CAP	RD	LOC ZONE	FRONT	DEPTH	TOT LND UTS	UNIT TYPE	DT	DPTH FACT	% COND	TOT ADJ	UNIT PRICE	ADJ UNIT PRICE	LAND VALUE	OTHER ADJUSTMENTS AND NOTES	YEAR	DENSITY	DECL	FRZ	YR	CONSRV
1	000100	C	RES	100	0006	OR	0.00	0.00	1.71	AC		1.00	1.00	0.70	45,000.00	31,500.00	53,865							

REVIEW DATE 03/27/2025 BY WWA Total Acres: 1.71 Total Land Value: 53,865 Market: 0 Agricultural: 0 Common: 53,865 PRINTED 07/30/2025 BY SYS

PT OF SE1/4 OF NE1/4
SEC 10-3N-23E IN OR 2704/39

HALL BENJAMIN DAVIS & LEANN MARIE
17107 TAZ DRIVE
HILLIARD, FL 32046

2025

10-3N-23-0000-0003-0040

BUILDING CHARACTERISTICS

ELEMENT	CD	CONSTRUCTION
Exterior Wall	33	AVERAGE 100
Roof Structur	03	GABLE/HIP 100
Roof Cover	12	MODULAR MT 100
Interior Wall	07	NONE 100
Interior Floo	03	CONC FINSH 100
Air Condition	01	NONE 100
Heating Type	01	NONE 100
Bedrooms		0 100
Bathrooms		0 100
Frame	02	WOOD FRAME 100
Quality	06	Quality Level 06

DOR CODE	0100	SINGLE FAMILY	
MAP NUM		MKT AREA	09
NEIGHBORHOOD/LOC	9001.00		

AREA TYPE	TOTAL GROSS AREA	PCT OF BASE	YEAR	TOT ADJ AREA	SUBAREA MARKET VALUE
BAS	864	100	1995	864	10,126
TOTALS	864			864	10,126

MARKET ADJUSTMENTS

TYPE	MDL	EFF. AREA	TOT ADJ PTS	EFF. BASE RATE	REPL. COST NEW	AYB	EYB	ECON	FNCT		NORM	% COND
6500	01	864	63.3420	23.44	20,252	1995	1995	0	0	0	50.00	50.00

2 GARAGE RES – 100% - 2025 Heated Area: 864 HX Base Yr 2025

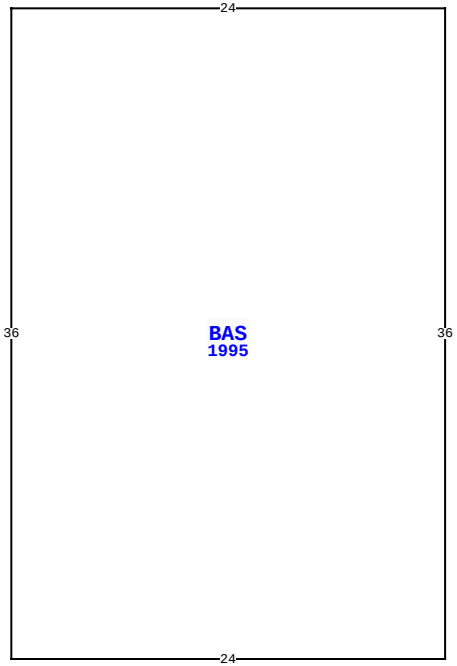

17107 TAZ DR, HILLIARD

BLD DATE		LGL DATE	
XF DATE		LAND DATE	05/21/2025 MLU
INC DATE		AG DATE	

NASSAU COUNTY PROPERTY

PAGE 2 of 2 4

VALUATION SUMMARY

VALUATION BY		STANDARD
Tax Group: 4	Tax Dist:	
BUILDING MARKET VALUE		260,154
TOTAL MARKET OB/XF VALUE		0
TOTAL LAND VALUE - MARKET		53,865
TOTAL MARKET VALUE		314,019
SOH/AGL Deduction		0
ASSESSED VALUE		314,019
TOTAL EXEMPTION VALUE	HX HB	50,722
BASE TAXABLE VALUE		263,297
TOTAL JUST VALUE		314,019
NCON VALUE		0
INCOME VALUE		
PREVIOUS YEAR MKT VALUE		249,182

PERMIT NUM	DESCRIPTION	AMT	ISSUED

SALES DATA

OFF RECORD Number	DATE	TYPE INST	Q / U	V / I	RSN CD	SALE PRICE
2704/39	3/22/2024	WD	Q	I	02	330,000
GRANTOR: CANTERBURY MIKEL & JE						
GRANTEE: HALL BENJAMIN DAVIS						
2550/1007	3/18/2022	WD	Q	I	01	285,000
GRANTOR: HENDRICKSON DEREK GIL						
GRANTEE: CANTERBURY MIKEL &						

BUILDING NOTES

BUILDING DIMENSIONS

BAS=[YR=1995;ORIG=56,10] E24 S36 W24 N36 $
.

EXTRA FEATURES

LN	OB/XF CODE	DESCRIPTION	BLD	CAP	L	W	UNITS	UT	Adj R	ADJ UNIT PRICE	ORIG COND	YEAR ON	YEAR ACTUAL	Q	% COND	OB/XF MKT VALUE	NOTES

LAND DESCRIPTION

TOTAL OB/XF 0

LN	USE CODE	CLS	LAND USE DESCRIPTION	CAP	RD	LOC ZONE	FRONT	DEPTH	TOT LND UTS	UNIT TYPE	DT	DPTH FACT	% COND	TOT ADJ	UNIT PRICE	ADJ UNIT PRICE	LAND VALUE	OTHER ADJUSTMENTS AND NOTES	YEAR	DENSITY	DECL	FRZ	YR	CONSRV

REVIEW DATE 03/27/2025 BY WWA Total Acres: 1.71 Total Land Value: 53,865 Market: 0 Agricultural: 0 Common: 53,865 PRINTED 07/30/2025 BY SYS