IN OR 2780/132
EX ESMT PT OR 716/869
ESMT PT OR 716/868

GAMBINO THOMAS DAVID REVOCABLE TRUST/GAMBINO THOMA
1220 MOUNT PARAN ROAD NE
ATLANTA, GA 30327

2025

10-2N-28-0000-0034-0000

BUILDING CHARACTERISTICS

ELEMENT	CD	CONSTRUCTION
Exterior Wall	10	ABOVE AVG 50
Exterior Wall	17	CB STUCCO 50
Roof Structur	03	GABLE/HIP 100
Roof Cover	13	STAND SEAM 100
Interior Wall	05	DRYWALL 100
Interior Floo	11	CLAY TILE 50
Interior Floo	12	HARDWOOD 50
Air Condition	03	CENTRAL 100
Heating Type	04	AIR DUCTED 100
Bedrooms		4 100
Bathrooms		2.5 100
Frame	02	WOOD FRAME 100
Stories	1.	1. 100
Units		0 100
BUD8 Adjustme	02	DIST FB 100
Occupancy	00	NONE 100
Quality	03	Quality Level 03
DOR CODE	0100	SINGLE FAMILY
MAP NUM		MKT AREA 01
NEIGHBORHOOD/LOC	1053.00	

AREA TYPE	TOTAL GROSS AREA	PCT OF BASE	YEAR	TOT ADJ AREA	SUBAREA MARKET VALUE
BAS	1,454	100	1993	1,454	250,382
BAS	808	100	2020	808	139,139
BAS	896	100	2020	896	154,293
FCP	196	25	2020	49	8,438
FGR	1,052	55	2020	579	99,705
FOP	50	30	2020	15	2,583
FOP	461	30	2020	138	23,764
PTO	24	5	1993	1	172
TOTALS	4,941			3,940	678,477

MARKET ADJUSTMENTS

TYPE	MDL	EFF. AREA	TOT ADJ PTS	EFF. BASE RATE	REPL. COST NEW	AYB	EYB	ECON	FNCT		NORM	% COND
0500	01	3,940	123.5000	195.13	768,812	1952	2000	0	0	0	11.75	88.25

1 SFR CUST – 0% - 0 Heated Area: 3158 HX Base Yr

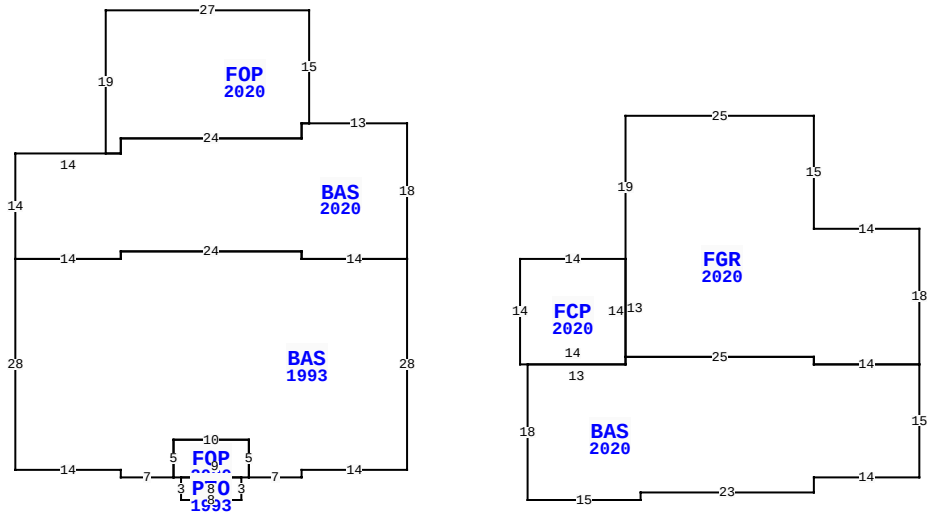

4066 S FLETCHER AVE, FERNANDINA BEACH

BLD DATE		LGL DATE	
XF DATE		LAND DATE	05/07/2025 MLU
INC DATE		AG DATE	

NASSAU COUNTY PROPERTY

PAGE 1 of 1 2

VALUATION SUMMARY

VALUATION BY	STANDARD
Tax Group: 2	Tax Dist:
BUILDING MARKET VALUE	678,477
TOTAL MARKET OB/XF VALUE	75,019
TOTAL LAND VALUE - MARKET	1,425,000
TOTAL MARKET VALUE	2,178,496
SOH/AGL Deduction	20,507
ASSESSED VALUE	2,157,989
TOTAL EXEMPTION VALUE	0
BASE TAXABLE VALUE	2,157,989
TOTAL JUST VALUE	2,178,496
NCON VALUE	0
INCOME VALUE	
PREVIOUS YEAR MKT VALUE	1,961,808

PERMIT NUM	DESCRIPTION	AMT	ISSUED
20200232	DUNEWALKL	30,000	04/24/2020
20200098	SWIM POOL	41,300	03/10/2020
20190475	ADDITION	600,000	09/30/2019
20041818	ELEC OTHER	1,000	10/07/2004
B972119	REPAIR/RRF	2,300	10/03/1997
5383	XFOB	12,000	05/24/1989

SALES DATA

OFF RECORD Number	DATE	TYPE INST	Q / U	V / I	RSN CD	SALE PRICE
2780/132	4/03/2025	QC	U	I	11	100
GRANTOR: GAMBINO THOMAS & AMEL						
GRANTEE: GAMBINO THOMAS DAVI						
2209/1900	7/10/2018	WD	Q	I	02	1,350,000
GRANTOR: ANSLEY WILEY S & DONA						
GRANTEE: GAMBINO THOMAS & AM						

BUILDING NOTES

BUILDING DIMENSIONS

BAS=[YR=2020] N18 W13 FOP=[YR=2020] N15 W27 S19 E2 N2 E24 N2 E1 $ W1 S2 W24 S2 W14S14E14 N1 E24 S1 E14$BAS=[YR=1993] W14 N1 W24 S1 W14 S28 E14 S1 E7 FOP=[YR=2020] E1 PTO=[YR=1993] S3E8 N3 W8$ E9 N5 W10 S5$ N5 E10 S5E7 N1 E14 N28$ PTR=E15 FCP=[YR=2020] E14 FGR=[YR=2020] N19 E25 S15 E14 S18 BAS=[YR=2020] S15 W14 S2 W23 S1 W15 N18 E13 N1 E25 S1E14$ W14 N1 W25 N13 $ S14 W14N14 $W15$.

EXTRA FEATURES

LN	OB/XF CODE	DESCRIPTION	BLD	CAP	L	W	UNITS	UT	Adj R	ADJ UNIT PRICE	ORIG COND	YEAR ON	YEAR ACTUAL	Q	% COND	OB/XF MKT VALUE	NOTES
1	0415	BEACHWALK	0	0	0	0	1,008.00	SF	5.75	5.75	100	2020	2020	3	86	4,985	
2	0861	POOL GUNIT	0	0	0	0	324.00	SF	85.00	85.00	100	2020	2020	3	90	24,786	
3	0857	SANDSTONE/	0	0	0	0	1,440.00	SF	16.00	16.00	100	2020	2020	3	99	22,810	
4	0811	CONCRETE B	0	0	0	0	4,403.00	SF	5.20	5.20	100	2020	2020	3	98	22,438	

LAND DESCRIPTION

TOTAL OB/XF 75,019

LN	USE CODE	CLS	LAND USE DESCRIPTION	CAP	RD	LOC ZONE	FRONT	DEPTH	TOT LND UTS	UNIT TYPE	DT	DPTH FACT	% COND	TOT ADJ	UNIT PRICE	ADJ UNIT PRICE	LAND VALUE	OTHER ADJUSTMENTS AND NOTES	YEAR	DENSITY	DECL	FRZ	YR	CONSRV
1	000120	C	RES OCEAN	0		R-1	75.00	400.00	75.00	FF		1.00	1.00	1.00	19,000.00	19,000.00	1,425,000							

REVIEW DATE 04/28/2021 BY RK Total Acres: 0.00 Total Land Value: 1,425,000 Market: 0 Agricultural: 0 Common: 1,425,000 PRINTED 07/30/2025 BY SYS