IN OR 1921/1554

PARKER NATHAN N & RACHELLE G
825 W END AVENUE APT 12-G
NEW YORK, NY 10025

2025

10-2N-28-0000-0033-0000

BUILDING CHARACTERISTICS

ELEMENT	CD	CONSTRUCTION
Exterior Wall	05	AVERAGE 60
Exterior Wall	15	CONC BLOCK 40
Roof Structur	03	GABLE/HIP 100
Roof Cover	03	COMP SHNGL 100
Interior Wall	04	PLYWOOD 50
Interior Wall	05	DRYWALL 50
Interior Floo	13	LVT/LAMNT 70
Interior Floo	11	CLAY TILE 30
Air Condition	03	CENTRAL 100
Heating Type	04	AIR DUCTED 100
Bedrooms		3 100
Bathrooms		2.5 100
Frame	02	WOOD FRAME 100
Stories	2.	2. 100
Units		0 100
BUD8 Adjustme	02	DIST FB 100
Occupancy	00	NONE 100
Quality	03	Quality Level 03
DOR CODE	0100	SINGLE FAMILY
MAP NUM		MKT AREA 01
NEIGHBORHOOD/LOC	1053.00	

AREA TYPE	TOTAL GROSS AREA	PCT OF BASE	YEAR	TOT ADJ AREA	SUBAREA MARKET VALUE
BAS	1,479	100	1993	1,479	211,935
FOP	120	30	1993	36	5,159
FOP	190	30	1993	57	8,168
SFB	323	80	1993	258	36,971
STP	8	10	2007	1	143
UCP	266	20	1993	53	7,594
UOP	200	20	1993	40	5,732
UOP	52	20	2007	10	1,433
UOP	136	20	2019	27	3,869
UST	695	45	1993	313	44,851
TOTALS	3,469			2,274	325,855

MARKET ADJUSTMENTS

TYPE	MDL	EFF. AREA	TOT ADJ PTS	EFF. BASE RATE	REPL. COST NEW	AYB	EYB	ECON	FNCT		NORM	% COND
0500	01	2,274	108.2900	171.10	389,081	1952	1990	0	0	0	16.25	83.75

1 SFR CUST – 0% - 0 Heated Area: 1737 HX Base Yr

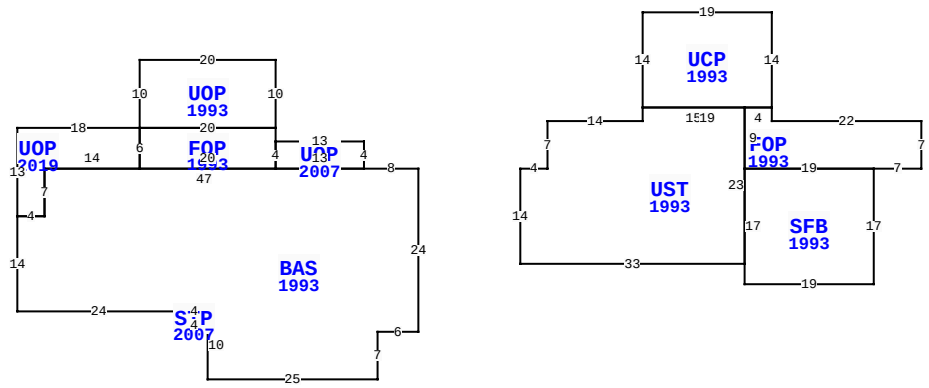

4088 S FLETCHER AVE, FERNANDINA BEACH

BLD DATE		LGL DATE	
XF DATE		LAND DATE	05/07/2025 MLU
INC DATE		AG DATE	

NASSAU COUNTY PROPERTY

PAGE 1 of 1 2

VALUATION SUMMARY

VALUATION BY	STANDARD
Tax Group: 2	Tax Dist:
BUILDING MARKET VALUE	325,855
TOTAL MARKET OB/XF VALUE	2,645
TOTAL LAND VALUE - MARKET	1,425,000
TOTAL MARKET VALUE	1,753,500
SOH/AGL Deduction	47,619
ASSESSED VALUE	1,705,881
TOTAL EXEMPTION VALUE	0
BASE TAXABLE VALUE	1,705,881
TOTAL JUST VALUE	1,753,500
NCON VALUE	0
INCOME VALUE	
PREVIOUS YEAR MKT VALUE	1,550,801

PERMIT NUM	DESCRIPTION	AMT	ISSUED
20101967	REPAIR/RRF	6,000	11/15/2010
5974	XFOB	12,000	05/10/1990

SALES DATA

OFF RECORD Number	DATE	TYPE INST	Q U	V I	RSN CD	SALE PRICE
1921/1554	6/05/2014	WD	Q	I	01	1,070,000
GRANTOR: HENDEE ARMAND ELKIN E						
GRANTEE: PARKER NATHAN N & R						
0922/1738	3/06/2000	TD	Q	I	01	100
GRANTOR: HENDEE ARMAND & NANCY						
GRANTEE: HENDEE ARMAND & NAN						

BUILDING NOTES

BUILDING DIMENSIONS

BAS=[YR=1993] W8 UOP=[YR=2007] N4 W13 FOP=[YR=1993] N2 UOP=[YR=1993] N10 W20 S10 UOP=[YR=2019] W18 S13 E4 N7 E14 N6$ E20$ W20 S6 E20 N4$ S4 E13 $ W47 S7 W4 S14 E24 STP=[YR=2007] S2 E4 N2 W4 $ E4 S10 E25 N7 E6 N24 $ PTR= E15 UST=[YR=1993] E4 N7 E14 N2 UCP=[YR=1993] N14 E19 S14 FOP=[YR=1993] S2 E22 S7W7 SFB=[YR=1993] S17 W19 N17 E19 $ W19 N9 E4 $ W19 $ E15 S23 W33 N14 $ W15 $.

EXTRA FEATURES

LN	OB/XF CODE	DESCRIPTION	BLD	CAP	L	W	UNITS	UT	Adj R	ADJ UNIT PRICE	ORIG COND	YEAR ON	YEAR ACTUAL	Q	% COND	OB/XF MKT VALUE	NOTES
1	0811	CONCRETE B	0	0	0	0	630.00	SF	5.20	5.20	100	1952	1952	3	20	655	
2	0500	FP-PRE FAB	0	0	0	0	1.00	UT	3,500.00	3,500.00	100	1952	1952	3	20	700	
3	0415	BEACHWALK	0	0	0	0	1,122.00	SF	5.75	5.75	100	1990	1990	3	20	1,290	

LAND DESCRIPTION

TOTAL OB/XF 2,645

LN	USE CODE	CLS	LAND USE DESCRIPTION	CAP	RD	LOC ZONE	FRONT	DEPTH	TOT LND UTS	UNIT TYPE	DT	DPTH FACT	% COND	TOT ADJ	UNIT PRICE	ADJ UNIT PRICE	LAND VALUE	OTHER ADJUSTMENTS AND NOTES	YEAR	DENSITY	DECL	FRZ	YR	CONSRV
1	000120	C	RES OCEAN	0		R-1	75.00	400.00	75.00	FF		1.00	1.00	1.00	19,000.00	19,000.00	1,425,000							

REVIEW DATE 03/20/2020 BY KWA Total Acres: 0.00 Total Land Value: 1,425,000 Market: 0 Agricultural: 0 Common: 1,425,000 PRINTED 07/30/2025 BY SYS