IN OR 2138/478

ROTH ALAN D & JULIA C
4271 S FLETCHER AVE
FERNANDINA BEACH, FL 32034

2025

10-2N-28-0000-0018-0020

NASSAU COUNTY PROPERTY

BUILDING CHARACTERISTICS

ELEMENT	CD	CONSTRUCTION
Exterior Wall	10	ABOVE AVG 60
Exterior Wall	17	CB STUCCO 40
Roof Structur	03	GABLE/HIP 100
Roof Cover	12	MODULAR MT 100
Interior Wall	05	DRYWALL 100
Interior Floo	11	CLAY TILE 50
Interior Floo	12	HARDWOOD 50
Air Condition	03	CENTRAL 100
Heating Type	04	AIR DUCTED 100
Bedrooms		3 100
Bathrooms		3 100
Frame	03	MASONRY 100
Stories	3.	3. 100
Units		0 100
BUD8 Adjustme	02	DIST FB 100
Quality	03	Quality Level 03

DOR CODE 0100 SINGLE FAMILY

MAP NUM | MKT AREA 01

NEIGHBORHOOD/LOC 1059.00

AREA TYPE	TOTAL GROSS AREA	PCT OF BASE	YEAR	TOT ADJ AREA	SUBAREA MARKET VALUE
BAL	204	15	2013	31	6,332
BAS	48	100	1993	48	9,805
BAS	1,008	100	1993	1,008	205,906
BAS	48	100	2013	48	9,805
BAS	144	100	2013	144	29,415
FGR	1,008	55	1993	554	113,166
FOP	60	30	2013	18	3,677
FOP	612	30	2013	184	37,586
FOP	612	30	2013	184	37,586
FUS	1,056	100	1993	1,056	215,711
TOTALS	5,280			3,486	712,089

MARKET ADJUSTMENTS

TYPE	MDL	EFF. AREA	TOT ADJ PTS	EFF. BASE RATE	REPL. COST NEW	AYB	EYB	ECON	FNCT		NORM	% COND
0500	11	3,486	138.5722	218.94	763,225	1986	2010	0	0	0	6.70	93.30

1 SFR CUST - 100% - 2018 Heated Area: 2448 HX Base Yr 2018

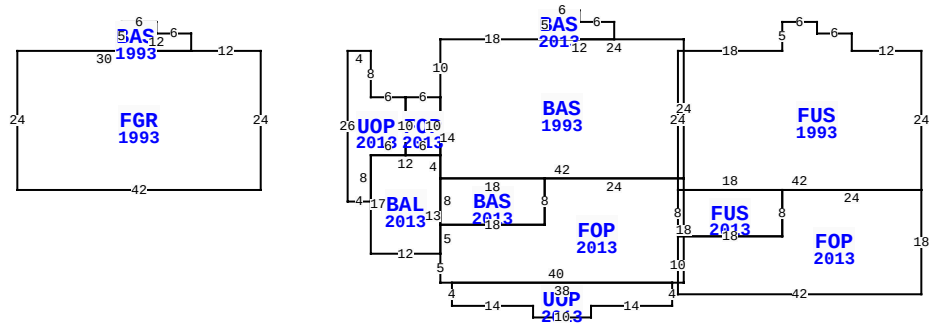

** This building has 13 Sub-Areas

4271 S FLETCHER AVE, FERNANDINA BEACH

BLD DATE		LGL DATE	
XF DATE		LAND DATE	05/07/2025 MLU
INC DATE		AG DATE	

NASSAU COUNTY PROPERTY — VALUATION SUMMARY

VALUATION BY		STANDARD
Tax Group: 2	Tax Dist:	
BUILDING MARKET VALUE		712,089
TOTAL MARKET OB/XF VALUE		11,514
TOTAL LAND VALUE - MARKET		780,609
TOTAL MARKET VALUE		1,504,212
SOH/AGL Deduction		603,876
ASSESSED VALUE		900,336
TOTAL EXEMPTION VALUE	HX HB	50,722
BASE TAXABLE VALUE		849,614
TOTAL JUST VALUE		1,504,212
NCON VALUE		0
INCOME VALUE		
PREVIOUS YEAR MKT VALUE		1,336,770

PERMIT NUM	DESCRIPTION	AMT	ISSUED
20130725	GAS PIPE	1,100	04/08/2013
20130521	REMODEL	3,000	03/15/2013
20130206	NEW CONSTR	3,000	01/30/2013
20122115	REMEODEL	250,000	10/12/2012
20122117	REPAIR/RRF	4,000	10/12/2012
20122118	DECKS	500	10/12/2012

SALES DATA

OFF RECORD Number	DATE	TYPE INST	Q / U	V / I	RSN CD	SALE PRICE
2138/0478	8/01/2017	WD	Q	I	01	1,000,000
GRANTOR: MILBURN MELANIE & REX						
GRANTEE: ROTH ALAN D & JULIA						
2068/1655	8/30/2016	QC	U	I	11	100
GRANTOR: RETREAT AT AMELIA LLC						
GRANTEE: MILBURN MELANIE						

BUILDING NOTES

EXTRA FEATURES

LN	OB/XF CODE	DESCRIPTION	BLD	CAP	L	W	UNITS	UT	Adj R	ADJ UNIT PRICE	ORIG COND	YEAR ON	YEAR ACTUAL	Q	% COND	OB/XF MKT VALUE	NOTES
1	0812	CONCRETE C	0	100	0	0	1,823.00	SF	4.00	4.00	100	1986	1986	3	47	3,427	
2	0812	CONCRETE C	0	100	0	0	2,351.00	SF	4.00	4.00	100	2006	2006	3	86	8,087	

BUILDING DIMENSIONS

FGR=[YR=1993] W12 BAS=[YR=1993] N3 W6 N2 W6 S5 E12$ W30 S24 E42 N24 $ PTR= E15 UOP=[YR=2013] E4 S8 E6 FOP=[YR=2013] E6 BAS=[YR=1993] N10 E18 BAS=[YR=2013] N5 E6 S2 E6 S3 W12$ E24 S24 FOP=[YR=2013] S18 W2 UOP=[YR=2013] S4 W14 S2 W10 N2 W14 N4 E38$ W40 N5 BAL=[YR=2013] W12 N17 E12 S4 BAS=[YR=2013] E18 S8 W18 N8$ S13$ N5 E18 N8 E24$ W42 N14$ S10 W6 N10$ S10 W6 S8 W4 N26$ W15$ PTR= E72 FUS=[YR=1993] E18 N5 E6 S2 E6 S3 E12 S24 FOP=[YR=2013] S18 W42 N10 FUS=[YR=2013] N8 E18 S8 W18$ E18 N8 E24$ W42 N24$ W72 $.

LAND DESCRIPTION

TOTAL OB/XF 11,514

LN	USE CODE	CLS	LAND USE DESCRIPTION	CAP	RD	LOC ZONE	FRONT	DEPTH	TOT LND UTS	UNIT TYPE	DT	DPTH FACT	% COND	TOT ADJ	UNIT PRICE	ADJ UNIT PRICE	LAND VALUE	OTHER ADJUSTMENTS AND NOTES	YEAR	DENSITY	DECL	FRZ	YR	CONSRV
1	000100	C	RES	100		R-1	98.00	285.00	97.50	FF	1	1.22	1.00	1.07	7,500.00	8,006.25	780,609							

REVIEW DATE 05/12/2019 BY KBA Total Acres: 0.00 Total Land Value: 780,609 Market: 0 Agricultural: 0 Common: 780,609 PRINTED 07/30/2025 BY SYS