PT FRACL SEC 10-2N-28E IN
IN OR 2384/433

BURDEKIN RONALD W & AMY L
406 RISING STAR RD
BROOKS, GA 30205

2025

10-2N-28-0000-0017-0000

NASSAU COUNTY PROPERTY

BUILDING CHARACTERISTICS

ELEMENT	CD	CONSTRUCTION
Exterior Wall	15	CONC BLOCK 60
Exterior Wall	07	ASB SHNGLE 40
Roof Structur	03	GABLE/HIP 100
Roof Cover	03	COMP SHNGL 100
Interior Wall	04	PLYWOOD 100
Interior Floo	12	HARDWOOD 100
Air Condition	03	CENTRAL 100
Heating Type	04	AIR DUCTED 100
Bedrooms		3 100
Bathrooms		2 100
Frame	02	WOOD FRAME 100
Stories	2.	2. 100
Units		0 100
BUD8 Adjustme	02	DIST FB 100
Occupancy	00	NONE 100
Quality	03	Quality Level 03
DOR CODE	0100	SINGLE FAMILY
MAP NUM		MKT AREA 01
NEIGHBORHOOD/LOC	1059.00	

AREA TYPE	TOTAL GROSS AREA	PCT OF BASE	YEAR	TOT ADJ AREA	SUBAREA MARKET VALUE
BAS	1,229	100	1993	1,229	24,826
FGR	441	55	1993	243	4,909
FOP	68	30	1993	20	404
FOP	68	30	1993	20	404
FUS	590	100	1993	590	11,918
TOTALS	2,396			2,102	42,460

MARKET ADJUSTMENTS

TYPE	MDL	EFF. AREA	TOT ADJ PTS	EFF. BASE RATE	REPL. COST NEW	AYB	EYB	ECON	FNCT	AP	NORM	% COND
0100	01	2,102	101.0000	101.00	212,302	1960	1960	0	0	50	36.50	20.00

1 SINGLE FAM – 0% - 0 Heated Area: 1819 HX Base Yr

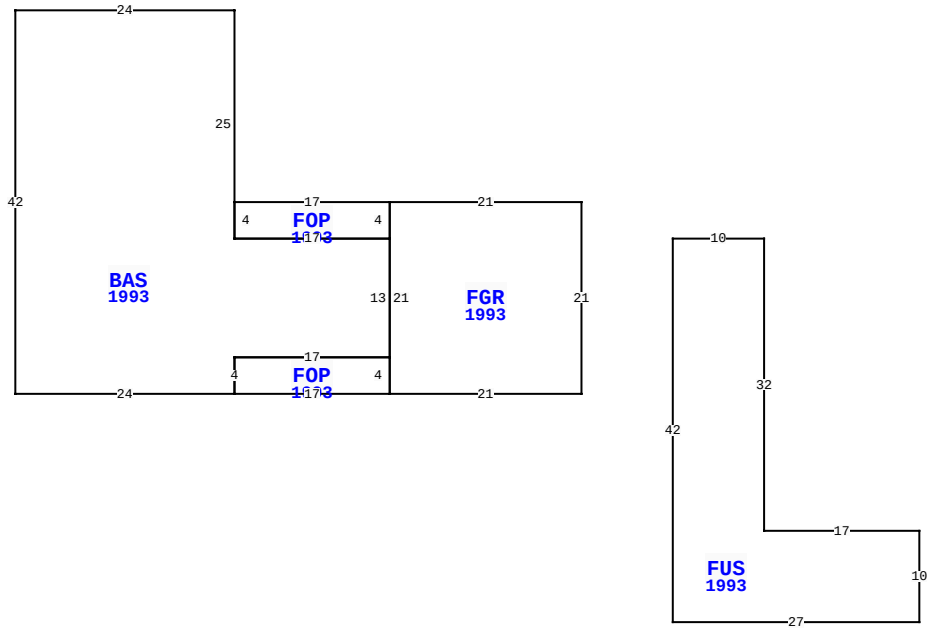

4269 S FLETCHER AVE, FERNANDINA BEACH

BLD DATE		LGL DATE	
XF DATE		LAND DATE	05/07/2025 MLU
INC DATE		AG DATE	

VALUATION SUMMARY

VALUATION BY	STANDARD
Tax Group: 2	Tax Dist:
BUILDING MARKET VALUE	42,460
TOTAL MARKET OB/XF VALUE	2,139
TOTAL LAND VALUE - MARKET	748,556
TOTAL MARKET VALUE	793,155
SOH/AGL Deduction	146,685
ASSESSED VALUE	646,470
TOTAL EXEMPTION VALUE	0
BASE TAXABLE VALUE	646,470
TOTAL JUST VALUE	793,155
NCON VALUE	0
INCOME VALUE	
PREVIOUS YEAR MKT VALUE	661,434

PERMIT NUM	DESCRIPTION	AMT	ISSUED
20090409	H/AC	5,200	04/02/2009
20051815	REPAIR/RRF	2,000	05/18/2005
B022124	REPAIR/RRF	2,000	12/13/2002
8134	REPAIR/RRF	2,900	02/09/1994

SALES DATA

OFF RECORD Number	DATE	TYPE INST	Q / U	V / I	RSN CD	SALE PRICE
2384/0433	8/07/2020	WD	Q	I	01	520,000
GRANTOR: WEBB WILLIAM L JR						
GRANTEE: BURDEKIN RONALD W &						
2235/1815	10/26/2018	FJ	U	I	11	0
GRANTOR: WEBB LOUISE CLARK EST						
GRANTEE: WEBB WILLIAM L JR						

BUILDING NOTES

BUILDING DIMENSIONS

BAS=[YR=1993] W17 N25 W24 S42 E24 FOP=[YR=1993] E17
FGR=[YR=1993] E21 N21 W21 S21 $ N4 W17 S4 $ N4 E17 N13 $
FOP=[YR=1993] N4 W17 S4 E17 $ PTR= E31 FUS=[YR=1993] E10
S32 E17 S10 W27 N42 $ W31 $.

EXTRA FEATURES

LN	OB/XF CODE	DESCRIPTION	BLD	CAP	L	W	UNITS	UT	Adj R	ADJ UNIT PRICE	ORIG COND	YEAR ON	YEAR ACTUAL	Q	% COND	OB/XF MKT VALUE	NOTES
1	0811	CONCRETE B	0	0	0	0	900.00	SF	5.20	5.20	100	1980	1980	3	30	1,404	
2	0500	FP-PRE FAB	0	0	0	0	1.00	UT	3,500.00	3,500.00	100	1960	1960	3	21	735	

LAND DESCRIPTION

TOTAL OB/XF 2,139

LN	USE CODE	CLS	LAND USE DESCRIPTION	CAP	RD	LOC ZONE	FRONT	DEPTH	TOT LND UTS	UNIT TYPE	DT	DPTH FACT	% COND	TOT ADJ	UNIT PRICE	ADJ UNIT PRICE	LAND VALUE	OTHER ADJUSTMENTS AND NOTES	YEAR	DENSITY	DECL	FRZ	YR	CONSRV
1	000100	C	RES	0		R-1	77.00	285.00	77.00	FF	1	1.22	1.00	1.30	7,500.00	9,721.50	748,556							

REVIEW DATE 10/19/2019 BY KBA Total Acres: 0.00 Total Land Value: 748,556 Market: 0 Agricultural: 0 Common: 748,556 PRINTED 07/30/2025 BY SYS