LOT 569
TRIBUTARY PHASE 1A UNIT 6
OR 2504/1849

DAVIS JESSICA LEIGH
75270 PUMBAGO TRC
YULEE, FL 32097

2025

10-2N-26-2010-0569-0000

BUILDING CHARACTERISTICS

ELEMENT	CD	CONSTRUCTION
Exterior Wall	31	HARDIE BRD 100
Roof Structur	03	GABLE/HIP 100
Roof Cover	03	COMP SHNGL 100
Interior Wall	05	DRYWALL 100
Interior Floo	13	LVT/LAMNT 50
Interior Floo	14	CARPET 50
Air Condition	03	CENTRAL 100
Heating Type	04	AIR DUCTED 100
Bedrooms		3 100
Bathrooms		2 100
Frame	02	WOOD FRAME 100
Stories	1.	1. 100
Units		0 100
Quality	04	Quality Level 04

DOR CODE 0100 SINGLE FAMILY
MAP NUM | MKT AREA 05
NEIGHBORHOOD/LOC 5020.00

AREA TYPE	TOTAL GROSS AREA	PCT OF BASE	YEAR	TOT ADJ AREA	SUBAREA MARKET VALUE
BAS	1,601	100	2023	1,601	182,866
FGR	581	55	2023	320	36,550
FOP	48	30	2023	14	1,599
FOP	160	30	2023	48	5,483
TOTALS	2,390			1,983	226,498

MARKET ADJUSTMENTS

TYPE	MDL	EFF. AREA	TOT ADJ PTS	EFF. BASE RATE	REPL. COST NEW	AYB	EYB	ECON	FNCT		NORM	% COND
0100	01	1,983	114.2190	114.22	226,498	2023	2023	0	0	0	0.00	100.00

1 SINGLE FAM – 100% - 2025 Heated Area: 1601 HX Base Yr 2025

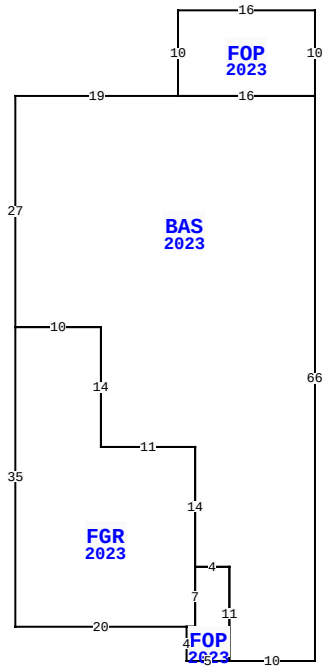

75270 PLUMBAGO TRC, YULEE

BLD DATE		LGL DATE	
XF DATE		LAND DATE	
INC DATE		AG DATE	

NASSAU COUNTY PROPERTY

PAGE 1 of 1 4

VALUATION SUMMARY

VALUATION BY		STANDARD
Tax Group: 4	Tax Dist:	
BUILDING MARKET VALUE		226,498
TOTAL MARKET OB/XF VALUE		3,328
TOTAL LAND VALUE - MARKET		65,000
TOTAL MARKET VALUE		294,826
SOH/AGL Deduction		32,194
ASSESSED VALUE		262,632
TOTAL EXEMPTION VALUE	HX HB	50,722
BASE TAXABLE VALUE		211,910
TOTAL JUST VALUE		294,826
NCON VALUE		0
INCOME VALUE		
PREVIOUS YEAR MKT VALUE		273,251

PERMIT NUM	DESCRIPTION	AMT	ISSUED
C23-05276	CO		11/15/2023
B23-05276	SFR	265,837	04/24/2023

SALES DATA

OFF RECORD Number	DATE	TYPE INST	Q U	V I	RSN CD	SALE PRICE
2687/914	12/28/2023	SW	Q	I	01	336,800
GRANTOR: RICHMOND AMERICAN HOM						
GRANTEE: DAVIS JESSICA LEIGH						
2522/0861	12/15/2021	SW	Q	V	05	4,393,200
GRANTOR: THREE RIVERS DEVELOPE						
GRANTEE: RICHMOND AMERICAN H						

BUILDING NOTES

BUILDING DIMENSIONS

BAS=[YR=2023;ORIG=75,0] W16 W19 S27 E10 S14 E11 S14 E4 S11 E10 N66 $
FGR=[YR=2023;ORIG=50,27] W10 S35 E20 E1 N7 N14 W11 N14 $
FOP=[YR=2023;ORIG=75,0] W16 N10 E16 S10 $
FOP=[YR=2023;ORIG=65,66] W5 N4 E1 N7 E4 S11 $
.

EXTRA FEATURES

LN	OB/XF CODE	DESCRIPTION	BLD	CAP	L	W	UNITS	UT	Adj R	ADJ UNIT PRICE	ORIG COND	YEAR ON	YEAR ACTUAL	Q	% COND	OB/XF MKT VALUE	NOTES
1	0811	CONCRETE B	0	100	0	0	640.00	SF	5.20	5.20	100	2024	2023		100	3,328	

LAND DESCRIPTION

TOTAL OB/XF 3,328

LN	USE CODE	CLS	LAND USE DESCRIPTION	CAP	RD	LOC ZONE	FRONT	DEPTH	TOT LND UTS	UNIT TYPE	DT	DPTH FACT	% COND	TOT ADJ	UNIT PRICE	ADJ UNIT PRICE	LAND VALUE	OTHER ADJUSTMENTS AND NOTES	YEAR	DENSITY	DECL	FRZ	YR	CONSRV
1	000100	C	RES	100		PUD	45.00	125.00	1.00	LT		1.00	1.00	1.00	65,000.00	65,000.00	65,000							

REVIEW DATE 12/12/2023 BY KW Total Acres: 0.00 Total Land Value: 65,000 Market: 0 Agricultural: 0 Common: 65,000 PRINTED 07/30/2025 BY SYS