LOT 213
TRIBUTARY PHASE 1A UNIT 2
OR 2434/703

JANES CHRISTOPHER F & TRACY JEAN KLEIN
75229 WHITE RABBIT AVE
YULEE, FL 32097

2025

10-2N-26-2010-0213-0000

BUILDING CHARACTERISTICS

ELEMENT	CD	CONSTRUCTION
Exterior Wall	31	HARDIE BRD 100
Roof Structur	08	IRREGULAR 100
Roof Cover	03	COMP SHNGL 100
Interior Wall	05	DRYWALL 100
Interior Floo	13	LVT/LAMNT 50
Interior Floo	14	CARPET 50
Air Condition	03	CENTRAL 100
Heating Type	04	AIR DUCTED 100
Bedrooms		5 100
Bathrooms		4 100
Frame	02	WOOD FRAME 100
Stories	1.5	1.5 100
Units		0 100
Occupancy	00	NONE 100
Quality	04	Quality Level 04
DOR CODE	0100	SINGLE FAMILY
MAP NUM		MKT AREA 05
NEIGHBORHOOD/LOC	5020.00	

AREA TYPE	TOTAL GROSS AREA	PCT OF BASE	YEAR	TOT ADJ AREA	SUBAREA MARKET VALUE
BAS	2,300	100	2022	2,300	252,010
FGR	399	55	2022	219	23,995
FOP	50	30	2022	15	1,644
FOP	128	30	2022	38	4,164
FUS	474	100	2022	474	51,936
PTO	260	5	2024	13	1,425
STR	52	10	2022	5	548
TOTALS	3,663			3,064	335,721

MARKET ADJUSTMENTS

TYPE	MDL	EFF. AREA	TOT ADJ PTS	EFF. BASE RATE	REPL. COST NEW	AYB	EYB	ECON	FNCT		NORM	% COND
0100	01	3,064	110.1240	110.12	337,408	2022	2022	0	0	0	0.50	99.50

1 SINGLE FAM – 100% - 2023 Heated Area: 2774 HX Base Yr 2023

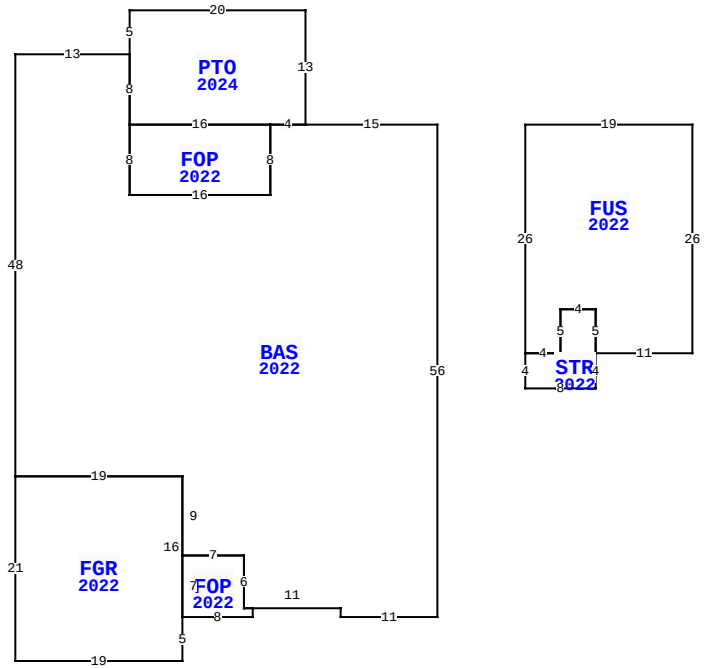

75229 WHITE RABBIT AVE, YULEE

BLD DATE		LGL DATE	
XF DATE		LAND DATE	
INC DATE		AG DATE	

NASSAU COUNTY PROPERTY

PAGE 1 of 1 4

VALUATION SUMMARY

VALUATION BY		STANDARD
Tax Group: 4	Tax Dist:	
BUILDING MARKET VALUE		335,721
TOTAL MARKET OB/XF VALUE		17,641
TOTAL LAND VALUE - MARKET		65,000
TOTAL MARKET VALUE		418,362
SOH/AGL Deduction		23,540
ASSESSED VALUE		394,822
TOTAL EXEMPTION VALUE	HX HB	50,722
BASE TAXABLE VALUE		344,100
TOTAL JUST VALUE		418,362
NCON VALUE		0
INCOME VALUE		
PREVIOUS YEAR MKT VALUE		388,211

PERMIT NUM	DESCRIPTION	AMT	ISSUED
B2301619	XFOB	8,642	02/05/2023
22008296	CO ISSUED	0	05/27/2022
21008768	NEW CONSTR	388,749	09/01/2021

SALES DATA

OFF RECORD Number	DATE	TYPE INST	Q / U	V / I	RSN CD	SALE PRICE
2566/1603	5/26/2022	WD	Q	I	01	525,000
GRANTOR: DREAM FINDERS HOMES L						
GRANTEE: JANES CHRISTOPHER F						
2462/1994	5/19/2021	SW	Q	V	05	1,008,400
GRANTOR: THREE RIVERS DEVELOPE						
GRANTEE: DREAM FINDERS HOMES						

BUILDING NOTES

BUILDING DIMENSIONS

BAS=[YR=2022;ORIG=0,0] W15 W4 S8 W16 N8 N8 W13 S48 E19 S9 E7 S6 E11 S1 E11 N56 $
FUS2022=[ORIG=10,0] E19 S26 W11 N5 W4 S5 W4 N26 $
FGR=[YR=2022;ORIG=-48,40] S21 E19 N5 N16 W19 $
FOP=[YR=2022;ORIG=-19,0] W16 S8 E16 N8 $
STR=[YR=2022;ORIG=18,26] S4 W8 N4 E4 N5 E4 S5 $
FOP=[YR=2022;ORIG=-29,56] E8 N1 W1 N6 W7 S7 $
PTR=[ORIG=0,0] E10 W10 $
PTO=[YR=2024;ORIG=-35,-13] S5 S8 E16 E4 N13 W20 $
.

EXTRA FEATURES

LN	OB/XF CODE	DESCRIPTION	BLD	CAP	L	W	UNITS	UT	Adj R	ADJ UNIT PRICE	ORIG COND	YEAR ON	YEAR ACTUAL	Q	% COND	OB/XF MKT VALUE	NOTES
1	0811	CONCRETE B	0	100	0	0	607.00	SF	5.20	5.20	100	2022	2022	3	99	3,125	
2	0911	SCRN RM A	0	100	13	20	260.00	SF	17.50	17.50	100	2024	2023		97	4,414	
3	0857	SANDSTONE/	0	100	36	8	288.00	SF	16.00	16.00	100	2024	2023		100	4,608	
4	0462	ST/AL FNC	0	100	100	0	500.00	SF	10.00	10.00	100	2024	2023		98	4,900	
5	0463	FENCE GATE	0	100	0	0	2.00	UT	300.00	300.00	100	2024	2023		99	594	

LAND DESCRIPTION

TOTAL OB/XF 17,641

LN	USE CODE	CLS	LAND USE DESCRIPTION	CAP	RD	LOC ZONE	FRONT	DEPTH	TOT LND UTS	UNIT TYPE	DT	DPTH FACT	% COND	TOT ADJ	UNIT PRICE	ADJ UNIT PRICE	LAND VALUE	OTHER ADJUSTMENTS AND NOTES	YEAR	DENSITY	DECL	FRZ	YR	CONSRV
1	000135	C	RES NATURAL	100		PUD	60.00	120.00	1.00	LT		1.00	1.00	1.00	65,000.00	65,000.00	65,000							

REVIEW DATE 04/20/2023 BY KW Total Acres: 0.00 Total Land Value: 65,000 Market: 0 Agricultural: 0 Common: 65,000 PRINTED 07/30/2025 BY SYS