N1/2 OF GOVT LOT 4 OF
SEC 10-2N-23E IN OR 1832/994
BEING PARCEL "E"

MIZELL FARMS LLC
3456 TURKEY TROT TRAIL
HILLIARD, FL 32046

2025

10-2N-23-0000-0014-0000

NASSAU COUNTY PROPERTY

BUILDING CHARACTERISTICS

ELEMENT	CD	CONSTRUCTION
Exterior Wall	20	FACE BRICK 100
Roof Structur	03	GABLE/HIP 100
Roof Cover	12	MODULAR MT 100
Interior Wall	05	DRYWALL 100
Interior Floo	11	CLAY TILE 100
Air Condition	03	CENTRAL 100
Heating Type	04	AIR DUCTED 100
Bedrooms		3 100
Bathrooms		2 100
Frame	02	WOOD FRAME 100
Stories	1.	1. 100
Units		0 100
Occupancy	00	NONE 100
Quality	03	Quality Level 03
DOR CODE	5000	IMPROVED AG
MAP NUM		MKT AREA 09
NEIGHBORHOOD/LOC	9001.00	

AREA TYPE	TOTAL GROSS AREA	PCT OF BASE	YEAR	TOT ADJ AREA	SUBAREA MARKET VALUE
BAS	2,259	100	1994	2,259	194,344
FDG	1,104	60	1996	662	56,953
FEP	470	80	2009	376	32,347
FGR	594	55	1994	327	28,132
FOP	207	30	1994	62	5,334
FOP	868	30	2023	260	22,368
TOTALS	5,502			3,946	339,478

MARKET ADJUSTMENTS

TYPE	MDL	EFF. AREA	TOT ADJ PTS	EFF. BASE RATE	REPL. COST NEW	AYB	EYB	ECON	FNCT		NORM	% COND
0100	01	3,946	108.9000	108.90	429,719	1994	1996	0	0	0	21.00	79.00

1 SINGLE FAM – 0% - 0 Heated Area: 2259 HX Base Yr

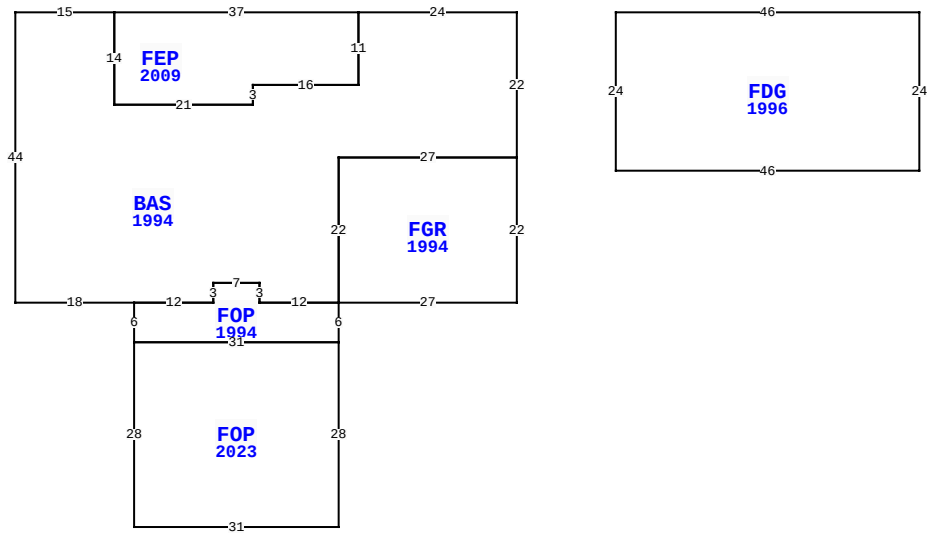

3456 TURKEY TROT TR, HILLIARD

BLD DATE		LGL DATE	
XF DATE		LAND DATE	05/09/2025 MLU
INC DATE		AG DATE	10/29/2024 KBA

VALUATION SUMMARY

VALUATION BY	STANDARD
Tax Group: 6	Tax Dist:
BUILDING MARKET VALUE	518,488
TOTAL MARKET OB/XF VALUE	226,097
TOTAL LAND VALUE - MARKET	381,100
TOTAL MARKET VALUE	827,749
SOH/AGL Deduction	0
ASSESSED VALUE	827,749
TOTAL EXEMPTION VALUE	0
BASE TAXABLE VALUE	827,749
TOTAL JUST VALUE	1,125,685
NCON VALUE	0
INCOME VALUE	
PREVIOUS YEAR MKT VALUE	1,016,628

PERMIT NUM	DESCRIPTION	AMT	ISSUED
B240000383	(2) 40X100 CHICKE	0	01/11/2024
B1700316	GARAGE	0	01/01/2017
B1531511	XFOB	0	12/30/2015
B1531512	XFOB	0	12/30/2015
B1530876	ANTENNA	5,000	07/01/2015
C21794	CO ISSUED	142,000	10/22/2008

SALES DATA

OFF RECORD Number	DATE	TYPE INST	Q / U	V / I	RSN CD	SALE PRICE
1832/0994	12/28/2012	WD	U	I	30	100
GRANTOR: MIZELL CLYDE J & NORA						
GRANTEE: MIZELL FARMS LLC						
1419/0679	6/12/2006	QC	Q	I	06	100
GRANTOR: MIZELL W DORMAN & JEA						
GRANTEE: MIZELL CLYDE J & NO						

BUILDING NOTES

BUILDING DIMENSIONS

BAS=[YR=1994;ORIG=0,0] W24 S11 W16 S3 W21 N14 W15 S44 E18 E12 N3 E7 S3 E12 N22 E27 N22 $
FDG=[YR=1996;ORIG=15,0] E46 S24 W46 N24 $
FGR=[YR=1994;ORIG=-27,44] E27 N22 W27 S22 $
FEP=[YR=2009;ORIG=-24,0] W37 S14 E21 N3 E16 N11 $
FOP=[YR=1994;ORIG=-58,44] S6 E31 N6 W12 N3 W7 S3 W12 $
PTR=[ORIG=0,0] E15 W15 $
FOP=[YR=2023;ORIG=-58,50] E31 S28 W31 N28 $
.

EXTRA FEATURES

LN	OB/XF CODE	DESCRIPTION	BLD	CAP	L	W	UNITS	UT	Adj R	ADJ UNIT PRICE	ORIG COND	YEAR ON	YEAR ACTUAL	Q	% COND	OB/XF MKT VALUE	NOTES
1	0202	BARN WD 30	0	0	0	0	4,200.00	SF	15.00	15.00	100	1980	1980	3	20	12,600	
2	0370	CHICKEN HS	0	0	388	24	9,312.00	SF	2.00	2.00	100	1984	1984	3	20	3,725	
3	0500	FP-PRE FAB	0	0	0	0	1.00	UT	3,500.00	3,500.00	100	1994	1994	3	74	2,590	
4	0812	CONCRETE C	0	0	0	0	2,040.00	SF	4.00	4.00	100	1994	1994	3	66	5,386	
5	0812	CONCRETE C	0	0	0	0	1,656.00	SF	4.00	4.00	100	1985	1985	3	44	2,915	
6	0370	CHICKEN HS	0	0	40	24	960.00	SF	2.00	2.00	100	2002	2002	3	29	557	
7	0370	CHICKEN HS	0	0	46	35	1,610.00	SF	2.00	2.00	100	2002	2002	3	29	934	
8	0681	POLE SHED	0	0	120	12	1,440.00	SF	15.00	15.00	100	2004	2004	3	32	6,912	
9	0350	CARPORT WD	0	0	150	75	11,250.00	SF	13.00	13.00	100	2006	2006	3	24	35,100	
10	0370	CHICKEN HS	0	0	50	40	2,000.00	SF	2.00	2.00	100	2007	2007	3	44	1,760	

TOTAL OB/XF 72,479

LAND DESCRIPTION

LN	USE CODE	CLS	LAND USE DESCRIPTION	CAP	RD	LOC ZONE	FRONT	DEPTH	TOT LND UTS	UNIT TYPE	DT	DPTH FACT	% COND	TOT ADJ	UNIT PRICE	ADJ UNIT PRICE	LAND VALUE	OTHER ADJUSTMENTS AND NOTES	YEAR	DENSITY	DECL	FRZ	YR	CONSRV
1	005000	C	AGRICULTURAL	0	0004	OR	0.00	0.00	2.00	AC		1.00	1.00	1.00	35,000.00	35,000.00	70,000							
2	005500	A	TIMBER 2 N S	0		OR	0.00	0.00	14.00	AC		1.00	1.00	1.00	525.00	525.00	7,350							
3	005902	A	HARDWOOD SI	0		OR	0.00	0.00	15.60	AC		1.00	1.00	1.00	190.00	190.00	2,964							
4	005010	A	SERVICE ACRE	0		OR	0.00	0.00	2.00	AC		1.00	1.00	1.00	500.00	500.00	1,000							
5	006005	A	PASTURE - GR	0		OR	0.00	0.00	5.00	AC		1.00	1.00	1.00	370.00	370.00	1,850							
6	009910	M	MARKET VALUE	0		OR	0.00	0.00	36.60	AC		1.00	1.00	1.00	8,500.00	8,500.00	311,100							

REVIEW DATE 02/14/2024 BY KBA Total Acres: 38.60 Total Land Value: 83,164 Market: 311,100 Agricultural: 13,164 Common: 70,000 PRINTED 07/30/2025 BY SYS

N1/2 OF GOVT LOT 4 OF
SEC 10-2N-23E IN OR 1832/994
BEING PARCEL "E"

MIZELL FARMS LLC
3456 TURKEY TROT TRAIL
HILLIARD, FL 32046

2025

10-2N-23-0000-0014-0000

NASSAU COUNTY PROPERTY

BUILDING CHARACTERISTICS

ELEMENT	CD	CONSTRUCTION
Exterior Wall	06	BD/BATTEN 100
Roof Structur	03	GABLE/HIP 100
Roof Cover	12	MODULAR MT 100
Interior Wall	04	PLYWOOD 100
Interior Floo	14	CARPET 70
Interior Floo	08	SHT VINYL 30
Air Condition	03	CENTRAL 100
Heating Type	04	AIR DUCTED 100
Bedrooms		3 100
Bathrooms		1 100
Frame	02	WOOD FRAME 100
Stories	1.	1. 100
Units		0 100
Occupancy	00	NONE 100
Quality	03	Quality Level 03
DOR CODE	5000	IMPROVED AG
MAP NUM		MKT AREA 09
NEIGHBORHOOD/LOC	9001.00	

AREA TYPE	TOTAL GROSS AREA	PCT OF BASE	YEAR	TOT ADJ AREA	SUBAREA MARKET VALUE
BAS	1,508	100	2007	1,508	97,035
UCP	1,120	20	2017	224	14,414
UOP	160	20	2007	32	2,059
UOP	414	20	2007	83	5,341
UST	108	45	2007	49	3,153
TOTALS	3,310			1,896	122,002

MARKET ADJUSTMENTS

TYPE	MDL	EFF. AREA	TOT ADJ PTS	EFF. BASE RATE	REPL. COST NEW	AYB	EYB	ECON	FNCT		NORM	% COND
0100	01	1,896	96.0400	96.04	182,092	1954	1980	0	0	0	33.00	67.00

2 SINGLE FAM – 0% - 0 Heated Area: 1508 HX Base Yr

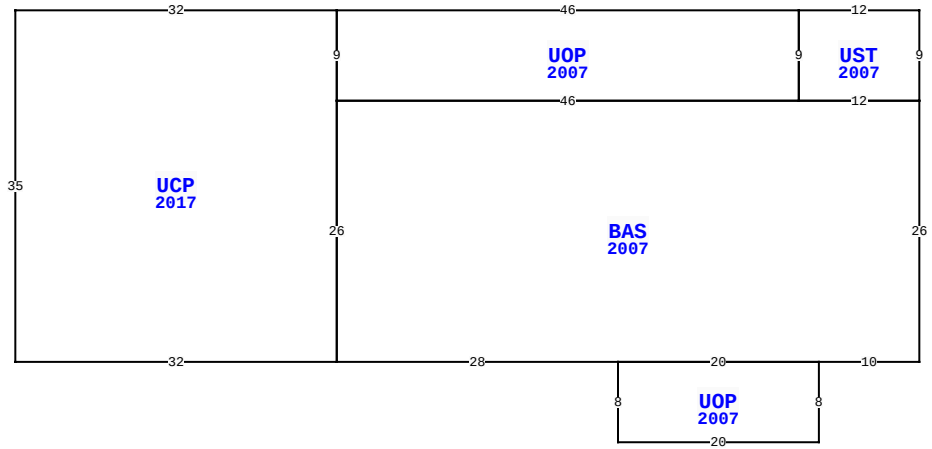

3456 TURKEY TROT TR, HILLIARD

BLD DATE		LGL DATE	
XF DATE		LAND DATE	05/09/2025 MLU
INC DATE		AG DATE	10/29/2024 KBA

VALUATION SUMMARY

VALUATION BY	STANDARD
Tax Group: 6	Tax Dist:
BUILDING MARKET VALUE	518,488
TOTAL MARKET OB/XF VALUE	226,097
TOTAL LAND VALUE - MARKET	381,100
TOTAL MARKET VALUE	827,749
SOH/AGL Deduction	0
ASSESSED VALUE	827,749
TOTAL EXEMPTION VALUE	0
BASE TAXABLE VALUE	827,749
TOTAL JUST VALUE	1,125,685
NCON VALUE	0
INCOME VALUE	
PREVIOUS YEAR MKT VALUE	1,016,628

PERMIT NUM	DESCRIPTION	AMT	ISSUED
E21240	ELEC OTHER	10,320	09/01/2008
B21794	TOWER	142,000	08/01/2008
B19576	AG BARN : 40X50	0	03/09/2007
B19577	AG BARN : 40X50	0	03/09/2007
E18600	ELEC OTHER	0	01/01/2007
B18816	FOUNDATION	27,000	12/01/2006

SALES DATA

OFF RECORD Number	DATE	TYPE INST	Q / U	V / I	RSN CD	SALE PRICE
1832/0994	12/28/2012	WD	U	I	30	100
GRANTOR: MIZELL CLYDE J & NORA						
GRANTEE: MIZELL FARMS LLC						
1419/0679	6/12/2006	QC	Q	I	06	100
GRANTOR: MIZELL W DORMAN & JEA						
GRANTEE: MIZELL CLYDE J & NO						

BUILDING NOTES

BUILDING DIMENSIONS

BAS=[YR=2007;ORIG=-1,11] W12 W46 S26 E28 E20 E10 N26 $
UOP=[YR=2007;ORIG=-13,2] W46 S9 E46 N9 $
UOP=[YR=2007;ORIG=-31,37] S8 E20 N8 W20 $
UST=[YR=2007;ORIG=-1,11] N9 W12 S9 E12 $
UCP=[YR=2017;ORIG=-91,37] E32 N26 N9 W32 S35 $
.

EXTRA FEATURES

LN	OB/XF CODE	DESCRIPTION	BLD	CAP	L	W	UNITS	UT	Adj R	ADJ UNIT PRICE	ORIG COND	YEAR ON	YEAR ACTUAL	Q	% COND	OB/XF MKT VALUE	NOTES
11	0370	CHICKEN HS	0	0	50	40	2,000.00	SF	2.00	2.00	100	2007	2007	3	44	1,760	
12	0810	CONCRETE A	0	0	0	0	360.00	SF	6.50	6.50	100	2007	2007	3	87	2,036	
13	0811	CONCRETE B	0	0	0	0	688.00	SF	5.20	5.20	100	2008	2008	3	88	3,148	
14	0424	CL FNC 6'	0	0	0	0	332.00	LF	20.00	20.00	100	2008	2008	3	72	4,781	
15	0463	FENCE GATE	0	0	0	0	2.00	UT	300.00	300.00	100	2008	2008	3	72	432	
16	0093	MANL GATE	0	0	0	0	1.00	UT	1,200.00	1,200.00	100	2008	2008	3	31	372	
17	0202	BARN WD 30	0	0	80	45	3,600.00	SF	15.00	15.00	100	2017	2017	3	81	43,740	
18	0810	CONCRETE A	0	0	45	10	450.00	SF	6.50	6.50	100	2017	2017	3	96	2,808	
19	0861	POOL GUNIT	0	0	48	22	1,056.00	SF	85.00	85.00	100	2024	2023		98	87,965	
20	0812	CONCRETE C	0	0	0	0	1,644.00	SF	4.00	4.00	100	2024	2023		100	6,576	

TOTAL OB/XF 153,618

LAND DESCRIPTION

LN	USE CODE	CLS	LAND USE DESCRIPTION	CAP	RD	LOC ZONE	FRONT	DEPTH	TOT LND UTS	UNIT TYPE	DT	DPTH FACT	% COND	TOT ADJ	UNIT PRICE	ADJ UNIT PRICE	LAND VALUE	OTHER ADJUSTMENTS AND NOTES	YEAR	DENSITY	DECL	FRZ	YR	CONSRV

REVIEW DATE 02/14/2024 BY KBA Total Acres: 38.60 Total Land Value: 83,164 Market: 311,100 Agricultural: 13,164 Common: 70,000 PRINTED 07/30/2025 BY SYS

N1/2 OF GOVT LOT 4 OF
SEC 10-2N-23E IN OR 1832/994
BEING PARCEL "E"

MIZELL FARMS LLC
3456 TURKEY TROT TRAIL
HILLIARD, FL 32046

2025

10-2N-23-0000-0014-0000

NASSAU COUNTY PROPERTY

BUILDING CHARACTERISTICS

ELEMENT	CD	CONSTRUCTION
Exterior Wall	25	MOD METAL 100
Roof Structur	04	WOOD TRUSS 100
Roof Cover	12	MODULAR MT 100
Interior Wall	07	NONE 100
Interior Floo	03	CONC FINSH 100
Air Condition	01	NONE 100
Heating Type	01	NONE 100
Fixtures		0 100
Frame	05	STEEL 100
Story Height		16 100
RMS		0 100
Stories	1.	1. 100
Units		0 100
Occupancy	00	NONE 100
Quality	03	Quality Level 03

DOR CODE	5000	IMPROVED AG	
MAP NUM		MKT AREA	09
NEIGHBORHOOD/LOC	9001.00		

AREA TYPE	TOTAL GROSS AREA	PCT OF BASE	YEAR	TOT ADJ AREA	SUBAREA MARKET VALUE
BAS	2,400	100	2007	2,400	50,007
UOP	840	20	2007	168	3,501
UOP	840	20	2007	168	3,501
TOTALS	4,080			2,736	57,008

MARKET ADJUSTMENTS

TYPE	MDL	EFF. AREA	TOT ADJ PTS	EFF. BASE RATE	REPL. COST NEW	AYB	EYB	ECON	FNCT		NORM	% COND
4803	04	2,736	55.5464	25.41	69,522	2007	2007	0	0	0	18.00	82.00

3 STOR WAREH – 0% - 0 Heated Area: 2400 HX Base Yr

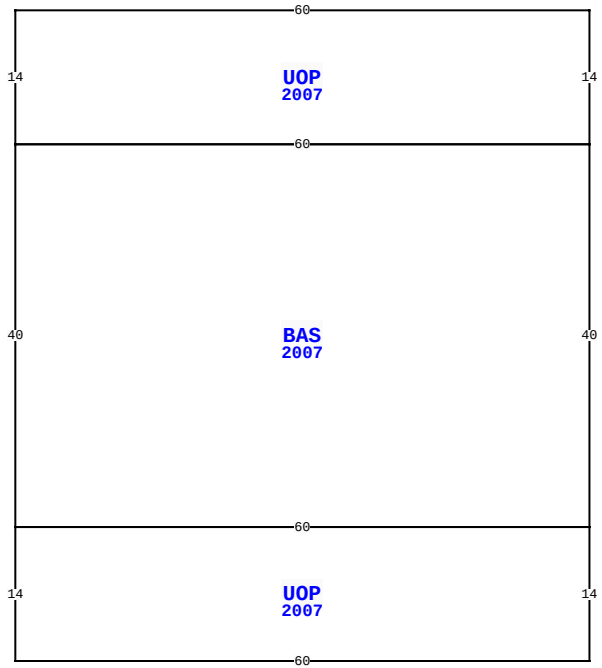

3456 TURKEY TROT TR, HILLIARD

BLD DATE		LGL DATE	
XF DATE		LAND DATE	05/09/2025 MLU
INC DATE		AG DATE	10/29/2024 KBA

VALUATION SUMMARY

VALUATION BY	STANDARD
Tax Group: 6	Tax Dist:
BUILDING MARKET VALUE	518,488
TOTAL MARKET OB/XF VALUE	226,097
TOTAL LAND VALUE - MARKET	381,100
TOTAL MARKET VALUE	827,749
SOH/AGL Deduction	0
ASSESSED VALUE	827,749
TOTAL EXEMPTION VALUE	0
BASE TAXABLE VALUE	827,749
TOTAL JUST VALUE	1,125,685
NCON VALUE	0
INCOME VALUE	
PREVIOUS YEAR MKT VALUE	1,016,628

PERMIT NUM	DESCRIPTION	AMT	ISSUED
C18816	CO ISSUED	0	12/01/2006

SALES DATA

OFF RECORD Number	DATE	TYPE INST	Q / U	V / I	RSN CD	SALE PRICE
1832/0994	12/28/2012	WD	U	I	30	100
GRANTOR: MIZELL CLYDE J & NORA						
GRANTEE: MIZELL FARMS LLC						
1419/0679	6/12/2006	QC	Q	I	06	100
GRANTOR: MIZELL W DORMAN & JEA						
GRANTEE: MIZELL CLYDE J & NO						

BUILDING NOTES

BUILDING DIMENSIONS

UOP=[YR=2007] W60 S14 BAS=[YR=2007] S40 UOP=[YR=2007] S14 E60 N14 W60 $ E60 N40 W60 $ E60 N14 $.

EXTRA FEATURES

LN	OB/XF CODE	DESCRIPTION	BLD	CAP	L	W	UNITS	UT	Adj R	ADJ UNIT PRICE	ORIG COND	YEAR ON	YEAR ACTUAL	Q	% COND	OB/XF MKT VALUE	NOTES

LAND DESCRIPTION

TOTAL OB/XF 0

LN	USE CODE	CLS	LAND USE DESCRIPTION	CAP	RD	LOC ZONE	FRONT	DEPTH	TOT LND UTS	UNIT TYPE	DT	DPTH FACT	% COND	TOT ADJ	UNIT PRICE	ADJ UNIT PRICE	LAND VALUE	OTHER ADJUSTMENTS AND NOTES	YEAR	DENSITY	DECL	FRZ	YR	CONSRV

REVIEW DATE 02/14/2024 BY KBA Total Acres: 38.60 Total Land Value: 83,164 Market: 311,100 Agricultural: 13,164 Common: 70,000 PRINTED 07/30/2025 BY SYS