LOT 10
MUSSLEWHITE ESTATES
ESMT IN OR 2396-1794, OR 2396-18

DEL MAR KEITH J & CHAKA E
45310 MUSSLEWHITE RD
CALLAHAN, FL 32011

2025

09-2N-25-0377-0010-0000

BUILDING CHARACTERISTICS

ELEMENT	CD	CONSTRUCTION
Exterior Wall	31	HARDIE BRD 100
Roof Structur	08	IRREGULAR 100
Roof Cover	03	COMP SHNGL 90
Roof Cover	12	MODULAR MT 10
Interior Wall	05	DRYWALL 100
Interior Floo	11	CLAY TILE 50
Interior Floo	13	LVT/LAMNT 50
Air Condition	03	CENTRAL 100
Heating Type	04	AIR DUCTED 100
Bedrooms		5 100
Bathrooms		4.5 100
Frame	02	WOOD FRAME 100
Stories	2.	2. 100
Units		0 100
Occupancy	00	NONE 100
Quality	03	Quality Level 03
DOR CODE	5000	IMPROVED AG
MAP NUM		MKT AREA 08
NEIGHBORHOOD/LOC	8026.00	

AREA TYPE	TOTAL GROSS AREA	PCT OF BASE	YEAR	TOT ADJ AREA	SUBAREA MARKET VALUE
BAS	2,253	100	2020	2,253	359,440
FGR	870	55	2020	478	76,260
FOP	653	30	2020	196	31,269
FSP	435	40	2021	174	27,760
FST	40	55	2020	22	3,510
FUS	1,602	100	2020	1,602	255,580
STP	8	10	2020	1	159
STP	24	10	2020	2	319
STP	30	10	2020	3	478
STR	48	10	2020	5	798
TOTALS	5,963			4,736	755,574

MARKET ADJUSTMENTS

TYPE	MDL	EFF. AREA	TOT ADJ PTS	EFF. BASE RATE	REPL. COST NEW	AYB	EYB	ECON	FNCT		NORM	% COND
0500	01	4,736	101.9960	161.15	763,206	2021	2021	0	0	0	1.00	99.00

1 SFR CUST – 100% - 2022 Heated Area: 3855 HX Base Yr 2022

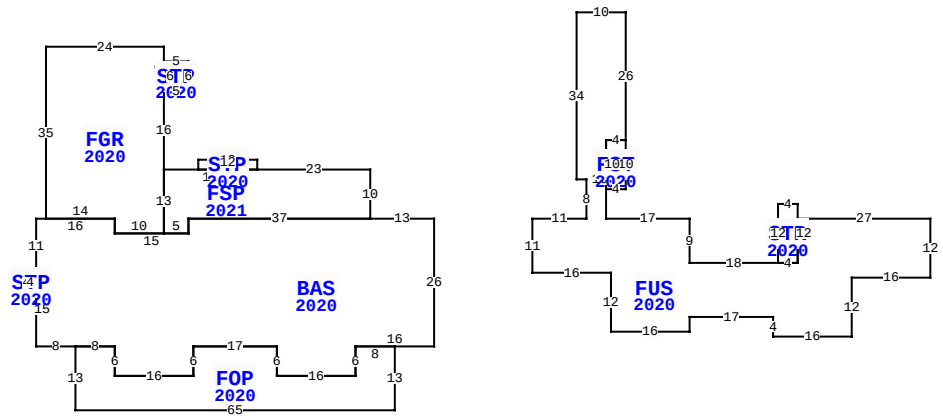

45310 MUSSLEWHITE RD, CALLAHAN

BLD DATE		LGL DATE	
XF DATE		LAND DATE	05/09/2025 MLU
INC DATE		AG DATE	02/26/2025 KBA

NASSAU COUNTY PROPERTY

PAGE 1 of 2 6

VALUATION SUMMARY

VALUATION BY		STANDARD
Tax Group: 6	Tax Dist:	
BUILDING MARKET VALUE		783,784
TOTAL MARKET OB/XF VALUE		60,747
TOTAL LAND VALUE - MARKET		355,505
TOTAL MARKET VALUE		995,035
SOH/AGL Deduction		406,998
ASSESSED VALUE		588,037
TOTAL EXEMPTION VALUE	HX HB	50,722
BASE TAXABLE VALUE		537,315
TOTAL JUST VALUE		1,200,036
NCON VALUE		0
INCOME VALUE		
PREVIOUS YEAR MKT VALUE		918,044

PERMIT NUM	DESCRIPTION	AMT	ISSUED
20008047	CO ISSUED	0	06/01/2021
21001355	GARAGE	68,800	02/05/2021
20008047	NEW CONSTR	457,983	09/02/2020

SALES DATA

OFF RECORD Number	DATE	TYPE INST	Q U	V I	RSN CD	SALE PRICE
2361/1071	5/14/2020	WD	Q	V	01	165,000

GRANTOR: BENNETTS PROPERTY SER

GRANTEE: DEL MAR KEITH J & C

BUILDING NOTES

BUILDING DIMENSIONS

BAS=[YR=2020] W13 FSP=[YR=2021] N10 W23 STP=[YR=2020] N2 W12 S2 E12$ W19 FGR=[YR=2020] N16 STP=[YR=2020] E5 N6 W5 S6$ N9 W24 S35 E14 S3 E10 N13$ S13 E5 N3 E37$ W37 S3 W15 N3 W16 S11 STP=[YR=2020] W2 S4 E2 N4$ S15 E8 FOP=[YR=2020] S13 E65 N13 W8 S6 W16 N6 W17 S6 W16 N6 W8$ E8 S6 E16 N6 E17 S6 E16 N6 E16 N26$ PTR= E20 FUS=[YR=2020] E11 N8 W2 N34 E10 S26 FST=[YR=2020] S10 W4 N10 E4$W4 S16E17 S9 E18 STR=[YR=2020] N12 E4 S12 W4$ E4 N9 E27 S12 W16 S12 W16 N4 W17 S3 W16 N12 W16 N11$ W20$.

EXTRA FEATURES

LN	OB/XF CODE	DESCRIPTION	BLD	CAP	L	W	UNITS	UT	Adj R	ADJ UNIT PRICE	ORIG COND	YEAR ON	YEAR ACTUAL	Q	% COND	OB/XF MKT VALUE	NOTES
1	0500	FP-PRE FAB	0	100	0	0	1.00	UT	3,500.00	3,500.00	100	2020	2020	3	99	3,465	
2	0812	CONCRETE C	0	100	0	0	2,655.00	SF	4.00	4.00	100	2020	2020	3	98	10,408	
3	0862	POOL VINYL	0	100	0	0	808.00	SF	50.00	50.00	100	2021	2021	3	93	37,572	
4	0845	KOOL DECK	0	100	0	0	1,296.00	SF	7.25	7.25	100	2021	2021	3	99	9,302	

LAND DESCRIPTION

TOTAL OB/XF 60,747

LN	USE CODE	CLS	LAND USE DESCRIPTION	CAP	RD	LOC ZONE	FRONT	DEPTH	TOT LND UTS	UNIT TYPE	DT	DPTH FACT	% COND	TOT ADJ	UNIT PRICE	ADJ UNIT PRICE	LAND VALUE	OTHER ADJUSTMENTS AND NOTES	YEAR	DENSITY	DECL	FRZ	YR	CONSRV
1	005000	C	AGRICULTURAL	100		OR	0.00	0.00	4.11	AC		1.00	1.00	1.20	30,000.00	36,000.00	147,960							
2	005902	A	HARDWOOD SI	0		OR	0.00	0.00	13.39	AC		1.00	1.00	1.00	190.00	190.00	2,544							
3	009910	M	MARKET VALUE	0		OR	0.00	0.00	13.39	AC		1.00	1.00	1.00	15,500.00	15,500.00	207,545							

REVIEW DATE 11/05/2021 BY KB Total Acres: 17.50 Total Land Value: 150,504 Market: 207,545 Agricultural: 2,544 Common: 147,960 PRINTED 07/30/2025 BY SYS

LOT 10
MUSSLEWHITE ESTATES
ESMT IN OR 2396-1794, OR 2396-18

DEL MAR KEITH J & CHAKA E
45310 MUSSLEWHITE RD
CALLAHAN, FL 32011

2025

09-2N-25-0377-0010-0000

BUILDING CHARACTERISTICS

ELEMENT	CD	CONSTRUCTION
Exterior Wall	12	CEDAR 100
Roof Structur	03	GABLE/HIP 100
Roof Cover	12	MODULAR MT 100
Interior Wall	01	MINIMUM 100
Interior Floo	03	CONC FINSH 100
Air Condition	01	NONE 100
Heating Type	01	NONE 100
Bedrooms		0 100
Bathrooms		0 100
Frame	02	WOOD FRAME 100
Stories	1.	1. 100
Units		0 100
Occupancy	00	NONE 100
Quality	06	Quality Level 06

DOR CODE 5000 IMPROVED AG
MAP NUM
MKT AREA 08
NEIGHBORHOOD/LOC 8026.00

AREA TYPE	TOTAL GROSS AREA	PCT OF BASE	YEAR	TOT ADJ AREA	SUBAREA MARKET VALUE
BAS	1,296	100	2021	1,296	26,040
FCP	432	25	2021	108	2,170
TOTALS	1,728			1,404	28,210

MARKET ADJUSTMENTS

TYPE	MDL	EFF. AREA	TOT ADJ PTS	EFF. BASE RATE	REPL. COST NEW	AYB	EYB	ECON	FNCT		NORM	% COND
8600	01	1,404	81.3280	21.15	29,695	2021	2021	0	0	0	5.00	95.00

2 BARNS – 0% - 2022 Heated Area: 1296 HX Base Yr 2022

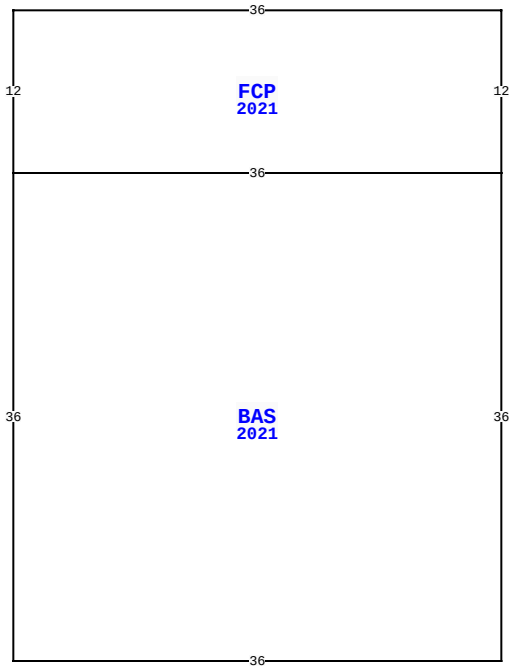

45310 MUSSLEWHITE RD, CALLAHAN

BLD DATE		LGL DATE	
XF DATE		LAND DATE	05/09/2025 MLU
INC DATE		AG DATE	02/26/2025 KBA

NASSAU COUNTY PROPERTY

PAGE 2 of 2 6

VALUATION SUMMARY

VALUATION BY		STANDARD
Tax Group: 6	Tax Dist:	
BUILDING MARKET VALUE		783,784
TOTAL MARKET OB/XF VALUE		60,747
TOTAL LAND VALUE - MARKET		355,505
TOTAL MARKET VALUE		995,035
SOH/AGL Deduction		406,998
ASSESSED VALUE		588,037
TOTAL EXEMPTION VALUE	HX HB	50,722
BASE TAXABLE VALUE		537,315
TOTAL JUST VALUE		1,200,036
NCON VALUE		0
INCOME VALUE		
PREVIOUS YEAR MKT VALUE		918,044

PERMIT NUM	DESCRIPTION	AMT	ISSUED

SALES DATA

OFF RECORD Number	DATE	TYPE INST	Q U	V I	RSN CD	SALE PRICE
2361/1071	5/14/2020	WD	Q	V	01	165,000

GRANTOR: BENNETTS PROPERTY SER
GRANTEE: DEL MAR KEITH J & C

BUILDING NOTES

BUILDING DIMENSIONS

FCP=[YR=2021] W36 S12 BAS=[YR=2021] S36 E36 N36 W36$ E36 N12$.

EXTRA FEATURES

L N	OB/XF CODE	DESCRIPTION	BLD	CAP	L	W	UNITS	UT	Adj R	ADJ UNIT PRICE	ORIG COND	YEAR ON	YEAR ACTUAL	Q	% COND	OB/XF MKT VALUE	NOTES

LAND DESCRIPTION

TOTAL OB/XF 0

L N	USE CODE	CLS	LAND USE DESCRIPTION	CAP	R D	LOC ZONE	FRONT	DEPTH	TOT LND UTS	UNIT TYPE	D T	DPTH FACT	% COND	TOT ADJ	UNIT PRICE	ADJ UNIT PRICE	LAND VALUE	OTHER ADJUSTMENTS AND NOTES	YEAR	DENSITY	DECL	FRZ	YR	CONSRV

REVIEW DATE 11/05/2021 BY KB Total Acres: 17.50 Total Land Value: 150,504 Market: 207,545 Agricultural: 2,544 Common: 147,960 PRINTED 07/30/2025 BY SYS