BLOCK 180 LOTS 9 THRU 12
(LESS TO S RD)TOWN OF HILLIARD

FORTIER STEPHANIE A & MICHAEL J
27353 NEW FRONT STREET
HILLIARD, FL 32046

2025

08-3N-24-2380-0180-0090

NASSAU COUNTY PROPERTY

BUILDING CHARACTERISTICS

ELEMENT	CD	CONSTRUCTION
Exterior Wall	05	AVERAGE 100
Roof Structur	08	IRREGULAR 100
Roof Cover	12	MODULAR MT 100
Interior Wall	03	PLASTER 90
Interior Wall	05	DRYWALL 10
Interior Floo	09	PINE WOOD 90
Interior Floo	14	CARPET 10
Air Condition	03	CENTRAL 100
Heating Type	04	AIR DUCTED 100
Bedrooms		3 100
Bathrooms		3 100
Frame	02	WOOD FRAME 100
Stories	1.5	1.5 100
Units		0 100
BUD8 Adjustme	03	DIST HI 100
Occupancy	00	NONE 100
Quality	05	Quality Level 05

DOR CODE	0100	SINGLE FAMILY	
MAP NUM		MKT AREA	06
NEIGHBORHOOD/LOC	6001.00		

AREA TYPE	TOTAL GROSS AREA	PCT OF BASE	YEAR	TOT ADJ AREA	SUBAREA MARKET VALUE
BAS	1,198	100	1993	1,198	131,789
FOP	413	30	1993	124	13,641
FUS	450	100	1995	450	49,503
TOTALS	2,061			1,772	194,933

MARKET ADJUSTMENTS

TYPE	MDL	EFF. AREA	TOT ADJ PTS	EFF. BASE RATE	REPL. COST NEW	AYB	EYB	ECON	FNCT		NORM	% COND
0100	01	1,772	121.2200	121.22	214,802	1930	2005	0	0	0	9.25	90.75

1 SINGLE FAM – 100% - 2021 Heated Area: 1648 HX Base Yr 2021

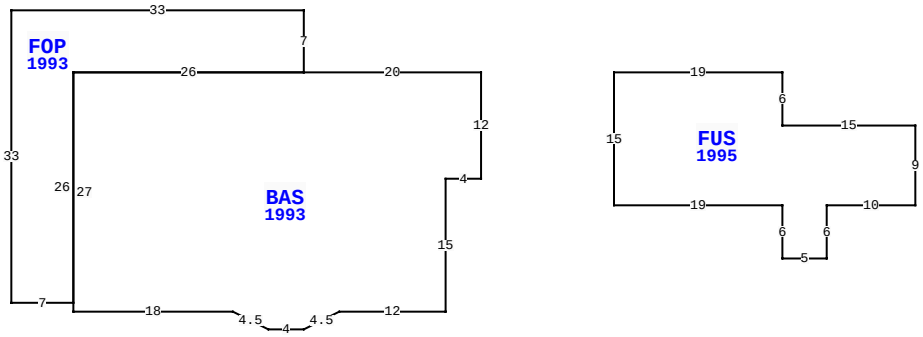

27353 NEW FRONT ST, HILLIARD

BLD DATE		LGL DATE	
XF DATE		LAND DATE	05/08/2025 MLU
INC DATE		AG DATE	

VALUATION SUMMARY

VALUATION BY		STANDARD
Tax Group: 3	Tax Dist:	
BUILDING MARKET VALUE		194,933
TOTAL MARKET OB/XF VALUE		0
TOTAL LAND VALUE - MARKET		35,000
TOTAL MARKET VALUE		229,933
SOH/AGL Deduction		100,562
ASSESSED VALUE		129,371
TOTAL EXEMPTION VALUE	HX HB	50,722
BASE TAXABLE VALUE		78,649
TOTAL JUST VALUE		229,933
NCON VALUE		0
INCOME VALUE		
PREVIOUS YEAR MKT VALUE		216,719

PERMIT NUM	DESCRIPTION	AMT	ISSUED
20210015	MANUF. SHED	0	02/01/2021
20200272	RES MISC	0	12/10/2020
20180182	REPAIR/RRF	0	08/28/2018

SALES DATA

OFF RECORD Number	DATE	TYPE INST	Q / U	V / I	RSN CD	SALE PRICE
2421/1774	12/18/2020	WD	Q	I	02	190,000
GRANTOR: CONNER DANIEL E & TRA						
GRANTEE: FORTIER STEPHANIE A						
2216/1190	8/03/2018	WD	U	I	37	28,000
GRANTOR: PIERSON KRISTINA						
GRANTEE: CONNER DANIEL E & T						

BUILDING NOTES

BUILDING DIMENSIONS

BAS=[YR=1993] W20 FOP=[YR=1993] N7 W33 S33 E7 N26 E26 $ W26 S27 E18 D2 R4 E4 U2 R4 E12 N15 E4 N12 $ PTR= E15
FUS=[YR=1995] E19 S6 E15 S9 W10 S6 W5 N6 W19 N15$ W15$.

EXTRA FEATURES

L N	OB/XF CODE	DESCRIPTION	BLD	CAP	L	W	UNITS	UT	Adj R	ADJ UNIT PRICE	ORIG COND	YEAR ON	YEAR ACTUAL	Q	% COND	OB/XF MKT VALUE	NOTES

LAND DESCRIPTION

TOTAL OB/XF 0

L N	USE CODE	CLS	LAND USE DESCRIPTION	CAP	R D	LOC ZONE	FRONT	DEPTH	TOT LND UTS	UNIT TYPE	D T	DPTH FACT	% COND	TOT ADJ	UNIT PRICE	ADJ UNIT PRICE	LAND VALUE	OTHER ADJUSTMENTS AND NOTES	YEAR	DENSITY	DECL	FRZ	YR	CONSRV
1	000100	C	RES	100	0006	R-2	100.00	125.00	100.00	FF		1.00	1.00	1.00	350.00	350.00	35,000							

REVIEW DATE 03/15/2021 BY TW Total Acres: 0.00 Total Land Value: 35,000 Market: 0 Agricultural: 0 Common: 35,000 PRINTED 07/30/2025 BY SYS