BLOCK 16 ALL OF LOTS 1 3 4 &
PT OF LOT 2
IN OR 1816/888

HILLIARD REAL ESTATE INVESTORS LLC
3570 KEITH ST NW
CLEVELAND, TN 37312

2025

08-3N-24-2380-0016-0011

NASSAU COUNTY PROPERTY

BUILDING CHARACTERISTICS

ELEMENT	CD	CONSTRUCTION
Exterior Wall	17	CB STUCCO 100
Roof Structur	13	P-STRESS C 100
Roof Cover	03	COMP SHNGL 100
Interior Wall	05	DRYWALL 50
Interior Wall	08	DECORATIVE 50
Interior Floo	07	CORK/VTILE 90
Interior Floo	14	CARPET 10
Ceiling	01	FIN.SUSPD 100
Air Condition	07	ENG PACKGE 100
Heating Type	04	AIR DUCTED 100
Fixtures		102 100
Frame	03	MASONRY 100
Story Height		10 100
RMS		48 100
Stories	1.	1. 100
Units		0 100
Occupancy	00	NONE 100
Quality	03	Quality Level 03
DOR CODE	0600	RETIREMENT HOMES
MAP NUM		MKT AREA 06
NEIGHBORHOOD/LOC	6001.00	

AREA TYPE	TOTAL GROSS AREA	PCT OF BASE	YEAR	TOT ADJ AREA	SUBAREA MARKET VALUE
BAS	18,747	100	1993	18,747	1,245,476
FCP	352	30	1993	106	7,042
FOP	35	30	1993	10	664
FOP	42	30	1993	13	864
FOP	42	30	1993	13	864
FST	117	50	1993	58	3,853
KTA	1,128	110	1993	1,241	82,447
SFB	561	80	1994	449	29,830
SPA	915	85	1993	778	51,687
TOTALS	21,939			21,415	1,422,727

MARKET ADJUSTMENTS

TYPE	MDL	EFF. AREA	TOT ADJ PTS	EFF. BASE RATE	REPL. COST NEW	AYB	EYB	ECON	FNCT	AP	NORM	% COND
7404	04	21,415	99.9068	166.09	3,556,817	1990	1990	0	0	10	50.00	40.00

1 NURS HOME - 0% - 0 Heated Area: 21102 HX Base Yr

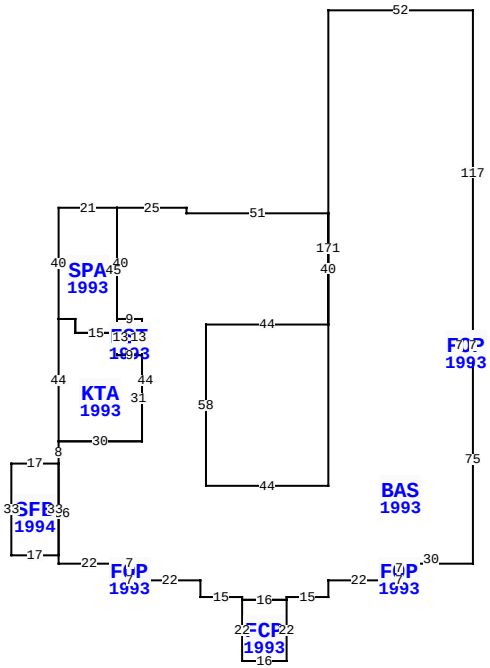

BLD DATE	06/04/2014 KK	LGL DATE
XF DATE		LAND DATE
INC DATE		AG DATE

3756 W THIRD ST, HILLIARD

VALUATION SUMMARY

VALUATION BY	STANDARD
Tax Group: 3	Tax Dist:
BUILDING MARKET VALUE	2,771,352
TOTAL MARKET OB/XF VALUE	169,107
TOTAL LAND VALUE - MARKET	332,580
TOTAL MARKET VALUE	3,273,039
SOH/AGL Deduction	0
ASSESSED VALUE	3,273,039
TOTAL EXEMPTION VALUE	0
BASE TAXABLE VALUE	3,273,039
TOTAL JUST VALUE	3,273,039
NCON VALUE	0
INCOME VALUE	
PREVIOUS YEAR MKT VALUE	3,379,292

PERMIT NUM	DESCRIPTION	AMT	ISSUED
20130090	H/AC	0	12/09/2013
20120005	ELEC OTHER	20,000	01/09/2012
20110239	COMMERCIAL ADDN	232,735	10/05/2011
20100013	MECH OTHER	8,100	02/04/2010
B0808108	REPAIR/RRF	0	08/08/2008
0702029	ELEC OTHER	25,000	02/26/2007

SALES DATA

OFF RECORD Number	DATE	TYPE INST	Q U /	V I /	RSN CD	SALE PRICE
1816/0885	9/26/2012	WD	Q	I	01	7,140,000
GRANTOR: HEALTH CARE REIT INC						
GRANTEE: HILLIARD REAL ESTAT						
1816/0888	9/24/2012	QC	U	I	11	100
GRANTOR: HILLIARD REAL ESTATE						
GRANTEE: HILLIARD REAL ESTAT						

BUILDING NOTES

BUILDING DIMENSIONS

BAS=[YR=1993] N40 W51 N2 W25 SPA=[YR=1993] W21 S40 KTA=[YR=1993] S44 E30 N31 FST=[YR=1993] N13 W9 S13 E9 $ W9 N8 W15 N5 W6 $ E6 S5 E15 N45 $ S40 E9 S44 W30 S8 SFB=[YR=1994] W17 S33 E17 N33 $S36 E22 FOP=[YR=1993] S6 E7 N6 W7 $ E7 S6 E22 S6 E15 S1 FCP=[YR=1993] S22 E16 N22 W16 $ E16 N1 E15 N6 E22 FOP=[YR=1993] E7 N6 W7 S6 $ N6 E30 N75 FOP=[YR=1993] N7 W5 S7 E5 $ W5 N7 E5 N117 W52 S171 W44 N58 E44 $.

EXTRA FEATURES

LN	OB/XF CODE	DESCRIPTION	BLD	CAP	L	W	UNITS	UT	Adj R	ADJ UNIT PRICE	ORIG COND	YEAR ON	YEAR ACTUAL	Q	% COND	OB/XF MKT VALUE	NOTES
1	0525	GAZEBO	0	0	0	0	1.00	UT	5,000.00	5,000.00	100	2000	2000	3	27	1,350	
2	0812	CONCRETE C	0	0	0	0	2,859.00	SF	4.00	4.00	100	1990	1990	3	57	6,519	
3	0803	ASPHALT C	0	0	0	0	33,134.00	SF	2.00	2.00	100	1990	1990	3	50	33,134	
4	0382	CHILLER	0	0	5	8	40.00	SF	92.50	92.50	100	1990	1990	3	20	740	
5	0381	COOLER	0	0	7	9	63.00	SF	82.50	82.50	100	1990	1990	3	20	1,040	
6	1126	CB/STC 8"	0	0	0	0	596.00	SF	8.00	8.00	100	1990	1990	3	57	2,718	
7	0972	ST LGHT UN	0	0	0	0	5.00	UT	2,530.00	2,530.00	100	1990	1990	3	27	3,416	
8	0812	CONCRETE C	0	0	0	0	3,257.00	SF	4.00	4.00	100	1994	1994	3	66	8,598	
9	0803	ASPHALT C	0	0	0	0	6,913.00	SF	2.00	2.00	100	1994	1994	3	50	6,913	
10	0402	CONC BUMPE	0	0	0	0	45.00	UT	25.00	25.00	100	1990	1990	3	66	743	

TOTAL OB/XF 65,171

LAND DESCRIPTION

LN	USE CODE	CLS	LAND USE DESCRIPTION	CAP	RD	LOC ZONE	FRONT	DEPTH	TOT LND UTS	UNIT TYPE	DT	DPTH FACT	% COND	TOT ADJ	UNIT PRICE	ADJ UNIT PRICE	LAND VALUE	OTHER ADJUSTMENTS AND NOTES	YEAR	DENSITY	DECL	FRZ	YR	CONSRV
1	000600	C	RETIREMENT	0	0004	C-1	0.00	0.00	221,720.00	SF		1.00	1.00	0.75	2.00	1.50	332,580							

REVIEW DATE 07/10/2020 BY TWA Total Acres: 0.00 Total Land Value: 332,580 Market: 0 Agricultural: 0 Common: 332,580 PRINTED 07/30/2025 BY SYS

BLOCK 16 ALL OF LOTS 1 3 4 &
PT OF LOT 2
IN OR 1816/888

HILLIARD REAL ESTATE INVESTORS LLC
3570 KEITH ST NW
CLEVELAND, TN 37312

2025

08-3N-24-2380-0016-0011

BUILDING CHARACTERISTICS

ELEMENT	CD	CONSTRUCTION
Exterior Wall	17	CB STUCCO 100
Roof Structur	13	P-STRESS C 100
Roof Cover	03	COMP SHNGL 100
Interior Wall	05	DRYWALL 50
Interior Wall	08	DECORATIVE 50
Interior Floo	07	CORK/VTILE 100
Ceiling	01	FIN.SUSPD 100
Air Condition	03	CENTRAL 100
Heating Type	04	AIR DUCTED 100
Fixtures		85 100
Frame	03	MASONRY 100
Story Height		10 100
RMS		44 100
Stories	1.	1. 100
Units		0 100
Occupancy	00	NONE 100
Quality	03	Quality Level 03
DOR CODE	0600	RETIREMENT HOMES
MAP NUM		MKT AREA 06
NEIGHBORHOOD/LOC	6001.00	

AREA TYPE	TOTAL GROSS AREA	PCT OF BASE	YEAR	TOT ADJ AREA	SUBAREA MARKET VALUE
BAS	19,755	100	1994	19,755	1,274,514
UOP	44	20	1994	9	581
UOP	384	20	1994	77	4,968
TOTALS	20,183			19,841	1,280,062

MARKET ADJUSTMENTS

TYPE	MDL	EFF. AREA	TOT ADJ PTS	EFF. BASE RATE	REPL. COST NEW	AYB	EYB	ECON	FNCT	AP	NORM	% COND
7404	04	19,841	97.0188	161.29	3,200,155	1994	1994	0	0	15	45.00	40.00

3 NURS HOME – 0% - 0 Heated Area: 19755 HX Base Yr

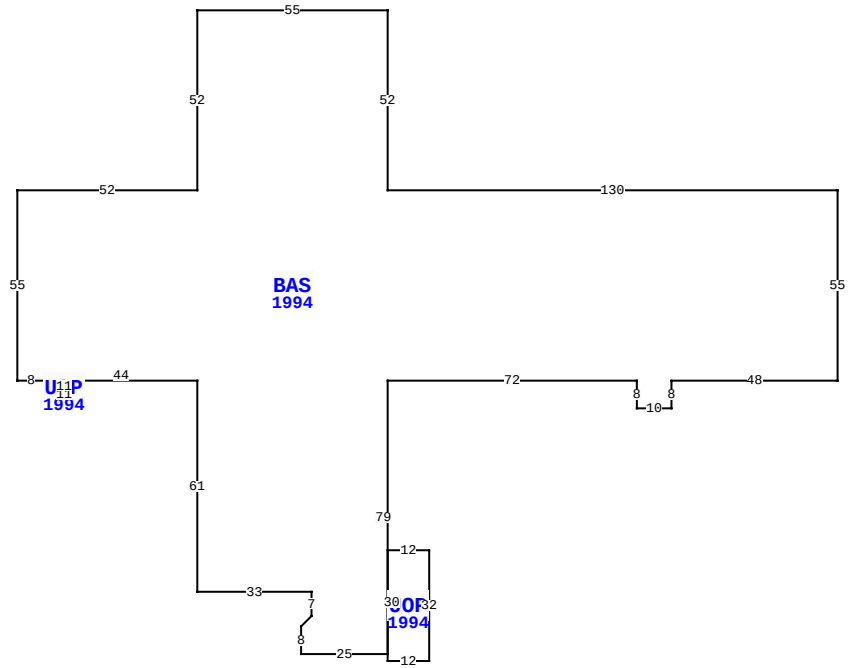

3756 W THIRD ST, HILLIARD

BLD DATE	06/04/2014	KK	LGL DATE
XF DATE			LAND DATE
INC DATE			AG DATE

NASSAU COUNTY PROPERTY

PAGE 2 of 4 3

VALUATION SUMMARY

VALUATION BY	STANDARD
Tax Group: 3	Tax Dist:
BUILDING MARKET VALUE	2,771,352
TOTAL MARKET OB/XF VALUE	169,107
TOTAL LAND VALUE - MARKET	332,580
TOTAL MARKET VALUE	3,273,039
SOH/AGL Deduction	0
ASSESSED VALUE	3,273,039
TOTAL EXEMPTION VALUE	0
BASE TAXABLE VALUE	3,273,039
TOTAL JUST VALUE	3,273,039
NCON VALUE	0
INCOME VALUE	
PREVIOUS YEAR MKT VALUE	3,379,292

PERMIT NUM	DESCRIPTION	AMT	ISSUED
9703155	REMODEL	2,650	03/21/1997

SALES DATA

OFF RECORD Number	DATE	TYPE INST	Q / U	V / I	RSN CD	SALE PRICE
1816/0885	9/26/2012	WD	Q	I	01	7,140,000
GRANTOR: HEALTH CARE REIT INC						
GRANTEE: HILLIARD REAL ESTAT						
1816/0888	9/24/2012	QC	U	I	11	100
GRANTOR: HILLIARD REAL ESTATE						
GRANTEE: HILLIARD REAL ESTAT						

BUILDING NOTES

BUILDING DIMENSIONS

BAS=[YR=1994] W130 N52 W55 S52 W52 S55 E8 UOP=[YR=1994] S4 E11 N4 W11$ E44 S61 E33 S7 D3 L3 S8 E25 UOP=[YR=1994] S2 E12 N32 W12 S30 $ N79 E72 S8 E10 N8 E48 N55 $.

EXTRA FEATURES

LN	OB/XF CODE	DESCRIPTION	BLD	CAP	L	W	UNITS	UT	Adj R	ADJ UNIT PRICE	ORIG COND	YEAR ON	YEAR ACTUAL	Q	% COND	OB/XF MKT VALUE	NOTES
11	0443	STK FNC 6'	0	0	0	0	48.00	LF	10.00	10.00	100	1994	1994	3	20	96	
12	0966	FIRE SPRNK	0	0	0	0	21,016.00	SF	3.00	3.00	100	1990	1990	3	60	37,829	
13	0966	FIRE SPRNK	0	0	0	0	19,695.00	SF	3.00	3.00	100	1994	1994	3	66	38,996	
14	0964	HALON SYST	0	0	14	4	36.00	SF	50.00	50.00	100	1990	1990	3	60	1,080	
15	0418	EXHST FAN	0	0	0	0	5.00	UT	400.00	400.00	100	1990	1990	3	20	400	
16	0811	CONCRETE B	0	0	0	0	628.00	SF	5.20	5.20	100	1990	1990	3	57	1,861	
17	0811	CONCRETE B	0	0	0	0	980.00	SF	5.20	5.20	100	1994	1994	3	66	3,363	
18	0097	AWNING CN	0	0	0	0	10.00	SF	65.00	65.00	100	2000	2000	3	40	260	
19	0510	GARAGE WD-	0	0	30	12	360.00	SF	25.90	25.90	100	2000	2000	3	27	2,517	
20	0400	CONC CURB	0	0	0	0	197.00	LF	15.00	15.00	100	1994	1994	3	74	2,187	

TOTAL OB/XF 88,589

LAND DESCRIPTION

LN	USE CODE	CLS	LAND USE DESCRIPTION	CAP	RD	LOC ZONE	FRONT	DEPTH	TOT LND UTS	UNIT TYPE	DT	DPTH FACT	% COND	TOT ADJ	UNIT PRICE	ADJ UNIT PRICE	LAND VALUE	OTHER ADJUSTMENTS AND NOTES	YEAR	DENSITY	DECL	FRZ	YR	CONSRV

REVIEW DATE 07/10/2020 BY TWA Total Acres: 0.00 Total Land Value: 332,580 Market: 0 Agricultural: 0 Common: 332,580 PRINTED 07/30/2025 BY SYS

BLOCK 16 ALL OF LOTS 1 3 4 &
PT OF LOT 2
IN OR 1816/888

HILLIARD REAL ESTATE INVESTORS LLC
3570 KEITH ST NW
CLEVELAND, TN 37312

2025

08-3N-24-2380-0016-0011

BUILDING CHARACTERISTICS

ELEMENT	CD	CONSTRUCTION
Exterior Wall	15	CONC BLOCK 100
Roof Structur	01	FLAT 100
Roof Cover	04	BUILT-UP 100
Interior Wall	05	DRYWALL 100
Interior Floo	10	TERRAZZO 90
Interior Floo	14	CARPET 10
Air Condition	03	CENTRAL 100
Heating Type	04	AIR DUCTED 100
Fixtures		9 100
Frame	02	WOOD FRAME 100
Story Height		10 100
RMS		9 100
Stories	1.	1. 100
Units		0 100
BUD8 Adjustme	03	DIST HI 100
Occupancy	00	NONE 100
Quality	03	Quality Level 03

DOR CODE 0600 RETIREMENT HOMES
MAP NUM | MKT AREA 06
NEIGHBORHOOD/LOC 6001.00

AREA TYPE	TOTAL GROSS AREA	PCT OF BASE	YEAR	TOT ADJ AREA	SUBAREA MARKET VALUE
BAS	1,269	100	1993	1,269	45,584
FOP	27	30	1993	8	287
FST	384	50	2009	192	6,897
TOTALS	1,680			1,469	52,769

MARKET ADJUSTMENTS

TYPE	MDL	EFF. AREA	TOT ADJ PTS	EFF. BASE RATE	REPL. COST NEW	AYB	EYB	ECON	FNCT		NORM	% COND
1721	04	1,469	100.9470	163.28	239,858	1958	1975	0	0	0	78.00	22.00

4 MDL OFFICE – 0% - 0 Heated Area: 1269 HX Base Yr

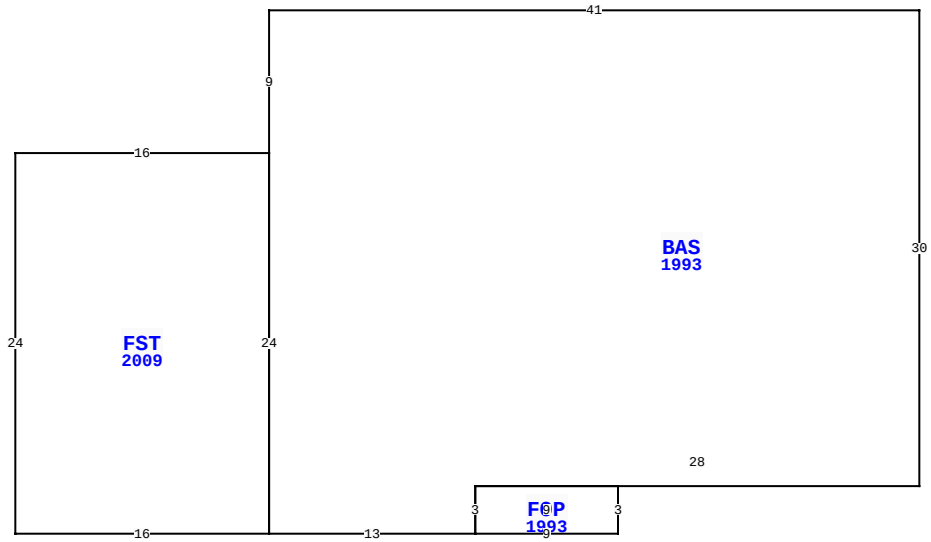

3756 W THIRD ST, HILLIARD

BLD DATE	06/04/2014 KK	LGL DATE	
XF DATE		LAND DATE	
INC DATE		AG DATE	

NASSAU COUNTY PROPERTY

VALUATION SUMMARY

VALUATION BY	STANDARD
Tax Group: 3	Tax Dist:
BUILDING MARKET VALUE	2,771,352
TOTAL MARKET OB/XF VALUE	169,107
TOTAL LAND VALUE - MARKET	332,580
TOTAL MARKET VALUE	3,273,039
SOH/AGL Deduction	0
ASSESSED VALUE	3,273,039
TOTAL EXEMPTION VALUE	0
BASE TAXABLE VALUE	3,273,039
TOTAL JUST VALUE	3,273,039
NCON VALUE	0
INCOME VALUE	
PREVIOUS YEAR MKT VALUE	3,379,292

PERMIT NUM	DESCRIPTION	AMT	ISSUED

SALES DATA

OFF RECORD Number	DATE	TYPE INST	Q U /	V I /	RSN CD	SALE PRICE
1816/0885	9/26/2012	WD	Q	I	01	7,140,000
GRANTOR: HEALTH CARE REIT INC						
GRANTEE: HILLIARD REAL ESTAT						
1816/0888	9/24/2012	QC	U	I	11	100
GRANTOR: HILLIARD REAL ESTATE						
GRANTEE: HILLIARD REAL ESTAT						

BUILDING NOTES

BUILDING DIMENSIONS

BAS=[YR=1993] W41 S9 FST=[YR=2009] W16 S24 E16 N24$ S24 E13
FOP=[YR=1993] E9 N3 W9 S3$ N3 E28 N30$.

EXTRA FEATURES

LN	OB/XF CODE	DESCRIPTION	BLD	CAP	L	W	UNITS	UT	Adj R	ADJ UNIT PRICE	ORIG COND	YEAR ON	YEAR ACTUAL	Q	% COND	OB/XF MKT VALUE	NOTES
21	1126	CB/STC 8"	0	0	0	0	759.00	SF	8.00	8.00	100	1990	1990	3	57	3,461	
22	0422	CL FNC 4'	0	0	0	0	896.00	LF	15.00	15.00	100	2000	2000	3	48	6,451	
23	0463	FENCE GATE	0	0	0	0	5.00	UT	300.00	300.00	100	2000	2000	3	48	720	
24	0424	CL FNC 6'	0	0	0	0	72.00	LF	20.00	20.00	100	2000	2000	3	48	691	
25	0476	VF 6 SBPL	0	0	0	0	16.00	LF	32.00	32.00	100	2000	2000	3	48	246	
26	0470	VNYL GATE	0	0	0	0	2.00	UT	300.00	300.00	100	2000	2000	3	48	288	
27	0810	CONCRETE A	0	0	0	0	392.00	SF	6.50	6.50	100	1970	1970	3	20	510	
28	0940	SHEDS/PORT	0	0	12	10	120.00	SF	19.50	19.50	100	2001	2001	3	20	468	
29	0810	CONCRETE A	0	0	0	0	460.00	SF	6.50	6.50	100	2005	2005	3	84	2,512	

LAND DESCRIPTION

TOTAL OB/XF 15,347

LN	USE CODE	CLS	LAND USE DESCRIPTION	CAP	RD	LOC ZONE	FRONT	DEPTH	TOT LND UTS	UNIT TYPE	DT	DPTH FACT	% COND	TOT ADJ	UNIT PRICE	ADJ UNIT PRICE	LAND VALUE	OTHER ADJUSTMENTS AND NOTES	YEAR	DENSITY	DECL	FRZ	YR	CONSRV

REVIEW DATE 07/10/2020 BY TWA Total Acres: 0.00 Total Land Value: 332,580 Market: 0 Agricultural: 0 Common: 332,580 PRINTED 07/30/2025 BY SYS

BLOCK 16 ALL OF LOTS 1 3 4 &
PT OF LOT 2
IN OR 1816/888

HILLIARD REAL ESTATE INVESTORS LLC
3570 KEITH ST NW
CLEVELAND, TN 37312

2025

08-3N-24-2380-0016-0011

BUILDING CHARACTERISTICS

ELEMENT	CD	CONSTRUCTION
Exterior Wall	17	CB STUCCO 100
Roof Structur	13	P-STRESS C 100
Roof Cover	04	BUILT-UP 100
Interior Wall	01	MINIMUM 100
Interior Floo	03	CONC FINSH 100
Ceiling	02	F.NOT SUS 100
Air Condition	03	CENTRAL 100
Heating Type	04	AIR DUCTED 100
Fixtures		0 100
Frame	03	MASONRY 100
Story Height		12 100
RMS		1 100
Stories	1.	1. 100
Units		0 100
Occupancy	00	NONE 100
Quality	04	Quality Level 04

DOR CODE	0600	RETIREMENT HOMES	
MAP NUM		MKT AREA	06
NEIGHBORHOOD/LOC	6001.00		

AREA TYPE	TOTAL GROSS AREA	PCT OF BASE	YEAR	TOT ADJ AREA	SUBAREA MARKET VALUE
BAS	450	100	2013	450	15,795
TOTALS	450			450	15,794

MARKET ADJUSTMENTS

TYPE	MDL	EFF. AREA	TOT ADJ PTS	EFF. BASE RATE	REPL. COST NEW	AYB	EYB	ECON	FNCT		NORM	% COND
4803	04	450	84.3150	38.57	17,356	2013	2013	0	0	0	9.00	91.00

5 STOR WAREH – 0% - 0 Heated Area: 450 HX Base Yr

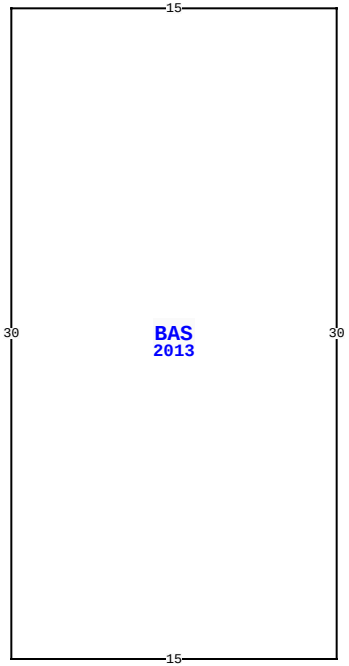

3756 W THIRD ST, HILLIARD

BLD DATE	06/04/2014	KK	LGL DATE
XF DATE			LAND DATE
INC DATE			AG DATE

NASSAU COUNTY PROPERTY

VALUATION SUMMARY

VALUATION BY	STANDARD
Tax Group: 3	Tax Dist:
BUILDING MARKET VALUE	2,771,352
TOTAL MARKET OB/XF VALUE	169,107
TOTAL LAND VALUE - MARKET	332,580
TOTAL MARKET VALUE	3,273,039
SOH/AGL Deduction	0
ASSESSED VALUE	3,273,039
TOTAL EXEMPTION VALUE	0
BASE TAXABLE VALUE	3,273,039
TOTAL JUST VALUE	3,273,039
NCON VALUE	0
INCOME VALUE	
PREVIOUS YEAR MKT VALUE	3,379,292

PERMIT NUM	DESCRIPTION	AMT	ISSUED

SALES DATA

OFF RECORD Number	DATE	TYPE INST	Q / U	V / I	RSN CD	SALE PRICE
1816/0885	9/26/2012	WD	Q	I	01	7,140,000
GRANTOR: HEALTH CARE REIT INC						
GRANTEE: HILLIARD REAL ESTAT						
1816/0888	9/24/2012	QC	U	I	11	100
GRANTOR: HILLIARD REAL ESTATE						
GRANTEE: HILLIARD REAL ESTAT						

BUILDING NOTES

BUILDING DIMENSIONS

BAS=[YR=2013] W15 S30 E15 N30$.

EXTRA FEATURES

L N	OB/XF CODE	DESCRIPTION	BLD	CAP	L	W	UNITS	UT	Adj R	ADJ UNIT PRICE	ORIG COND	YEAR ON	YEAR ACTUAL	Q	% COND	OB/XF MKT VALUE	NOTES

LAND DESCRIPTION

TOTAL OB/XF 0

L N	USE CODE	CLS	LAND USE DESCRIPTION	CAP	R D	LOC ZONE	FRONT	DEPTH	TOT LND UTS	UNIT TYPE	D T	DPTH FACT	% COND	TOT ADJ	UNIT PRICE	ADJ UNIT PRICE	LAND VALUE	OTHER ADJUSTMENTS AND NOTES	YEAR	DENSITY	DECL	FRZ	YR	CONSRV

REVIEW DATE 07/10/2020 BY TWA Total Acres: 0.00 Total Land Value: 332,580 Market: 0 Agricultural: 0 Common: 332,580 PRINTED 07/30/2025 BY SYS