LOT 86
NASSAU STATION OR 2425/1321

ENHANCE SOUTHEAST GROUP INC
1015 ATLANTIC BLVD #410
ATLANTIC BEACH, FL 32233-3313

2025

08-2N-27-0215-0086-0000

NASSAU COUNTY PROPERTY

BUILDING CHARACTERISTICS

ELEMENT	CD	CONSTRUCTION
Exterior Wall	31	HARDIE BRD 100
Roof Structur	03	GABLE/HIP 100
Roof Cover	03	COMP SHNGL 100
Interior Wall	05	DRYWALL 100
Interior Floo	11	CLAY TILE 60
Interior Floo	14	CARPET 40
Air Condition	03	CENTRAL 100
Heating Type	04	AIR DUCTED 100
Bedrooms		3 100
Bathrooms		2.5 100
Frame	02	WOOD FRAME 100
Stories	2.	2. 100
Units		0 100
Occupancy	00	NONE 100
Quality	03	Quality Level 03
DOR CODE	0100	SINGLE FAMILY
MAP NUM		MKT AREA 04
NEIGHBORHOOD/LOC	4093.00	

AREA TYPE	TOTAL GROSS AREA	PCT OF BASE	YEAR	TOT ADJ AREA	SUBAREA MARKET VALUE
BAS	532	100	2021	532	64,897
FGR	280	55	2021	154	18,786
FOP	36	30	2021	11	1,341
FOP	72	30	2021	22	2,684
FUS	800	100	2021	800	97,590
STR	48	10	2021	5	610
TOTALS	1,768			1,524	185,909

MARKET ADJUSTMENTS

TYPE	MDL	EFF. AREA	TOT ADJ PTS	EFF. BASE RATE	REPL. COST NEW	AYB	EYB	ECON	FNCT		NORM	% COND
0320	01	1,524	123.2160	123.22	187,787	2021	2021	0	0	0	1.00	99.00

1 TOWNHOUSE – 0% - 0 Heated Area: 1332 HX Base Yr

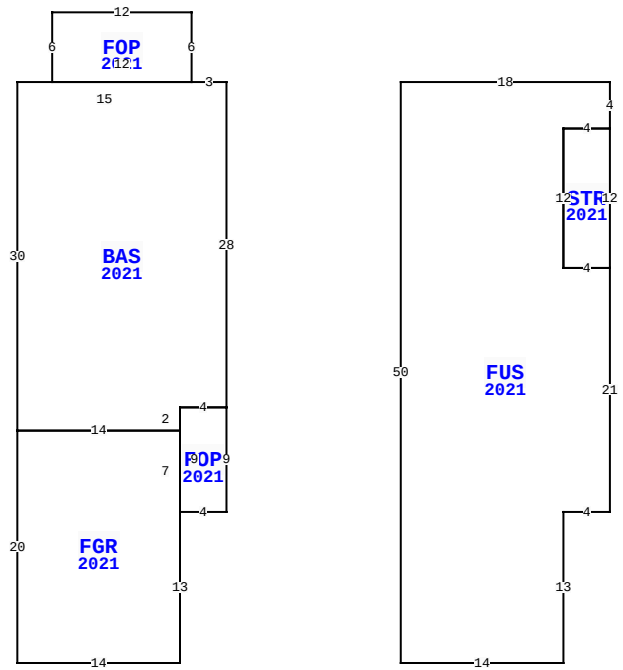

75520 HARVESTER ST, YULEE

BLD DATE		LGL DATE	
XF DATE		LAND DATE	
INC DATE		AG DATE	

VALUATION SUMMARY

VALUATION BY	STANDARD
Tax Group: 4	Tax Dist:
BUILDING MARKET VALUE	185,909
TOTAL MARKET OB/XF VALUE	2,580
TOTAL LAND VALUE - MARKET	40,000
TOTAL MARKET VALUE	228,489
SOH/AGL Deduction	0
ASSESSED VALUE	228,489
TOTAL EXEMPTION VALUE	0
BASE TAXABLE VALUE	228,489
TOTAL JUST VALUE	228,489
NCON VALUE	0
INCOME VALUE	
PREVIOUS YEAR MKT VALUE	220,087

PERMIT NUM	DESCRIPTION	AMT	ISSUED
210000	NEW CONSTR	180,000	03/01/2021

SALES DATA

OFF RECORD Number	DATE	TYPE INST	Q U	V I	RSN CD	SALE PRICE
2525/0130	12/22/2021	WD	Q	I	01	248,000
GRANTOR: D R HORTON INC-JACKSO						
GRANTEE: ENHANCE SOUTHEAST G						
2440/0368	3/04/2021	WD	Q	V	05	450,800
GRANTOR: PATRIOT RIDGE LLP						
GRANTEE: D R HORTON INC-JACK						

BUILDING NOTES

BUILDING DIMENSIONS

BAS=[YR=2021] W3 FOP=[YR=2021] N6 W12 S6 E12$ W15 S30
FGR=[YR=2021] S20 E14 N13 FOP2021 =E4 N9 W4 S9$ N7 W14$ E14
N2 E4 N28$ PTR=E15 FUS=[YR=2021] E18 S4 STR=[YR=2021] S12 W4
N12 E 4$ W4 S12 E4 S21 W4 S13 W14 N50$ W15$.

EXTRA FEATURES

LN	OB/XF CODE	DESCRIPTION	BLD	CAP	L	W	UNITS	UT	Adj R	ADJ UNIT PRICE	ORIG COND	YEAR ON	YEAR ACTUAL	Q	% COND	OB/XF MKT VALUE	NOTES
1	0810	CONCRETE A	0	0	0	0	401.00	SF	6.50	6.50	100	2021	2021	3	99	2,580	

LAND DESCRIPTION

TOTAL OB/XF 2,580

LN	USE CODE	CLS	LAND USE DESCRIPTION	CAP	RD	LOC ZONE	FRONT	DEPTH	TOT LND UTS	UNIT TYPE	DT	DPTH FACT	% COND	TOT ADJ	UNIT PRICE	ADJ UNIT PRICE	LAND VALUE	OTHER ADJUSTMENTS AND NOTES	YEAR	DENSITY	DECL	FRZ	YR	CONSRV
1	000310	C	TOWNHOUSE	0		PUD	0.00	0.00	1.00	LT		1.00	1.00	1.00	40,000.00	40,000.00	40,000							

REVIEW DATE 12/09/2021 BY NW Total Acres: 0.00 Total Land Value: 40,000 Market: 0 Agricultural: 0 Common: 40,000 PRINTED 07/30/2025 BY SYS