LOT 84
NASSAU STATION OR 2425/1321

JONES JOHNNY M
75500 HARVESTER ST
YULEE, FL 32097

**2025**

**08-2N-27-0215-0084-0000**

## BUILDING CHARACTERISTICS

| ELEMENT | CD | CONSTRUCTION |
|---|---|---|
| Exterior Wall | 31 | HARDIE BRD 100 |
| Roof Structur | 03 | GABLE/HIP 100 |
| Roof Cover | 03 | COMP SHNGL 100 |
| Interior Wall | 05 | DRYWALL 100 |
| Interior Floo | 11 | CLAY TILE 60 |
| Interior Floo | 14 | CARPET 40 |
| Air Condition | 03 | CENTRAL 100 |
| Heating Type | 04 | AIR DUCTED 100 |
| Bedrooms | | 2 100 |
| Bathrooms | | 2.5 100 |
| Frame | 02 | WOOD FRAME 100 |
| Stories | 2. | 2. 100 |
| Units | | 0 100 |
| Occupancy | 00 | NONE 100 |
| Quality | 03 | Quality Level 03 |

DOR CODE 0100 SINGLE FAMILY
MAP NUM | MKT AREA 04
NEIGHBORHOOD/LOC 4093.00

| AREA TYPE | TOTAL GROSS AREA | PCT OF BASE | YEAR | TOT ADJ AREA | SUBAREA MARKET VALUE |
|---|---|---|---|---|---|
| BAS | 532 | 100 | 2021 | 532 | 66,167 |
| FGR | 280 | 55 | 2021 | 154 | 19,154 |
| FOP | 36 | 30 | 2021 | 11 | 1,368 |
| FOP | 72 | 30 | 2021 | 22 | 2,736 |
| FUS | 636 | 100 | 2021 | 636 | 79,102 |
| STR | 48 | 10 | 2021 | 5 | 622 |
| TOTALS | 1,604 | | | 1,360 | 169,148 |

## MARKET ADJUSTMENTS

| TYPE | MDL | EFF. AREA | TOT ADJ PTS | EFF. BASE RATE | REPL. COST NEW | AYB | EYB | ECON | FNCT | | NORM | % COND |
|---|---|---|---|---|---|---|---|---|---|---|---|---|
| 0320 | 01 | 1,360 | 125.6320 | 125.63 | 170,857 | 2021 | 2021 | 0 | 0 | 0 | 1.00 | 99.00 |

1 TOWNHOUSE - 100% - 2024 Heated Area: 1168 HX Base Yr 2024

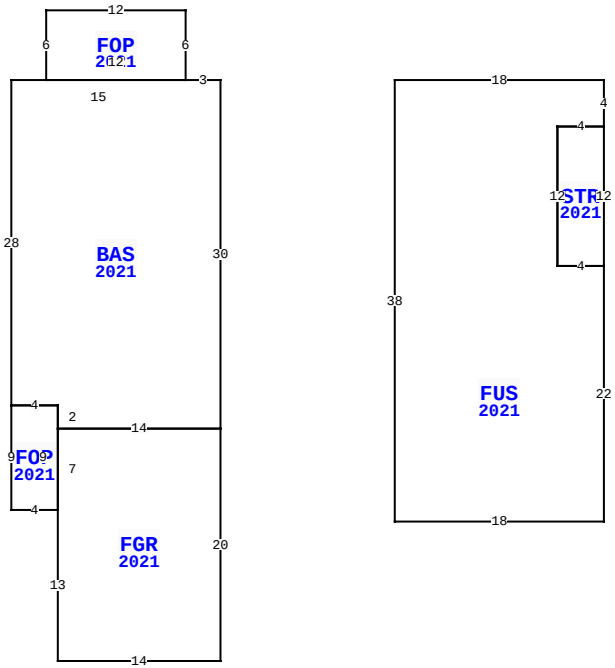


75500 HARVESTER ST, YULEE

| | | | |
|---|---|---|---|
| BLD DATE | | LGL DATE | |
| XF DATE | | LAND DATE | |
| INC DATE | | AG DATE | |

## NASSAU COUNTY PROPERTY

PAGE 1 of 1 4

### VALUATION SUMMARY

| | | |
|---|---|---|
| VALUATION BY | | STANDARD |
| Tax Group: 4 | Tax Dist: | |
| BUILDING MARKET VALUE | | 169,148 |
| TOTAL MARKET OB/XF VALUE | | 2,580 |
| TOTAL LAND VALUE - MARKET | | 40,000 |
| TOTAL MARKET VALUE | | 211,728 |
| SOH/AGL Deduction | | 1,726 |
| ASSESSED VALUE | | 210,002 |
| TOTAL EXEMPTION VALUE | HX HB | 50,722 |
| BASE TAXABLE VALUE | | 159,280 |
| TOTAL JUST VALUE | | 211,728 |
| NCON VALUE | | 0 |
| INCOME VALUE | | |
| PREVIOUS YEAR MKT VALUE | | 204,084 |

| PERMIT NUM | DESCRIPTION | AMT | ISSUED |
|---|---|---|---|
| 2100000 | NEW CONSTR | 158,000 | 03/01/2021 |

## SALES DATA

| OFF RECORD Number | DATE | TYPE INST | Q U | V I | RSN CD | SALE PRICE |
|---|---|---|---|---|---|---|
| 2655/7 | 6/30/2023 | WD | Q | I | 02 | 246,000 |
| GRANTOR: CARUSO JOHN | | | | | | |
| GRANTEE: JONES JOHNNY M | | | | | | |
| 2525/1681 | 12/29/2021 | SW | Q | I | 02 | 237,900 |
| GRANTOR: D R HORTON INC-JACKSO | | | | | | |
| GRANTEE: CARUSO JOHN | | | | | | |

## BUILDING NOTES

## BUILDING DIMENSIONS

BAS=[YR=2021] W3 FOP=[YR=2021] N6 W12 S6 E12$ W15 S28
FOP=[YR=2021] S9 E4 FGR=[YR=2021] S13 E14 N20 W14 S7$ N9 W4$
E4 S2 E14 N30$ PTR=E15 FUS=[YR=2021] E18 S4 STR=[YR=2021] S12
W4 N12 E4$ W4 S12 E4 S22 W18 N38$ W15$.

## EXTRA FEATURES

| LN | OB/XF CODE | DESCRIPTION | BLD | CAP | L | W | UNITS | UT | Adj R | ADJ UNIT PRICE | ORIG COND | YEAR ON | YEAR ACTUAL | Q | % COND | OB/XF MKT VALUE | NOTES |
|---|---|---|---|---|---|---|---|---|---|---|---|---|---|---|---|---|---|
| 1 | 0810 | CONCRETE A | 0 | 100 | 0 | 0 | 401.00 | SF | 6.50 | 6.50 | 100 | 2021 | 2021 | 3 | 99 | 2,580 | |

## LAND DESCRIPTION

TOTAL OB/XF 2,580

| LN | USE CODE | CLS | LAND USE DESCRIPTION | CAP | RD | LOC ZONE | FRONT | DEPTH | TOT LND UTS | UNIT TYPE | DT | DPTH FACT | % COND | TOT ADJ | UNIT PRICE | ADJ UNIT PRICE | LAND VALUE | OTHER ADJUSTMENTS AND NOTES | YEAR | DENSITY | DECL | FRZ | YR | CONSRV |
|---|---|---|---|---|---|---|---|---|---|---|---|---|---|---|---|---|---|---|---|---|---|---|---|---|
| 1 | 000310 | C | TOWNHOUSE | 100 | | PUD | 0.00 | 0.00 | 1.00 | LT | | 1.00 | 1.00 | 1.00 | 40,000.00 | 40,000.00 | 40,000 | | | | | | | |

REVIEW DATE 12/16/2021 BY NW Total Acres: 0.00 Total Land Value: 40,000 Market: 0 Agricultural: 0 Common: 40,000 PRINTED 07/30/2025 BY SYS