E1/2 OF SE1/4
IN OR 1618/779

PAFFORD JEFFREY M & PATRICIA J
75248 HARVESTER ROAD
YULEE, FL 32097

2025

08-2N-27-0000-0005-0330

NASSAU COUNTY PROPERTY

BUILDING CHARACTERISTICS

ELEMENT	CD	CONSTRUCTION
Exterior Wall	16	WD FR STUC 100
Roof Structur	03	GABLE/HIP 100
Roof Cover	03	COMP SHNGL 100
Interior Wall	05	DRYWALL 100
Interior Floo	11	CLAY TILE 60
Interior Floo	14	CARPET 40
Air Condition	03	CENTRAL 100
Heating Type	04	AIR DUCTED 100
Bedrooms		4 100
Bathrooms		3 100
Frame	02	WOOD FRAME 100
Stories	1.5	1.5 100
Units		0 100
Occupancy	00	NONE 100
Quality	02	Quality Level 02

DOR CODE	0100	SINGLE FAMILY	
MAP NUM		MKT AREA	04
NEIGHBORHOOD/LOC	4053.00		

AREA TYPE	TOTAL GROSS AREA	PCT OF BASE	YEAR	TOT ADJ AREA	SUBAREA MARKET VALUE
BAS	2,191	100	2007	2,191	270,142
DCK	448	10	2012	45	5,549
FGR	609	55	2007	335	41,304
FOP	58	30	2007	17	2,096
FSP	266	40	2012	106	13,070
FUS	462	100	2007	462	56,963
PTO	144	5	2021	7	863
UAT	122	10	2007	12	1,480
UAT	160	10	2007	16	1,973
UDU	256	55	2007	141	17,385
TOTALS	4,716			3,332	410,823

MARKET ADJUSTMENTS

TYPE	MDL	EFF. AREA	TOT ADJ PTS	EFF. BASE RATE	REPL. COST NEW	AYB	EYB	ECON	FNCT		NORM	% COND
0900	01	3,332	102.0832	134.75	448,987	2007	2007	0	0	0	8.50	91.50

1 SNGL FAM – 100% - 2019 Heated Area: 2653 HX Base Yr

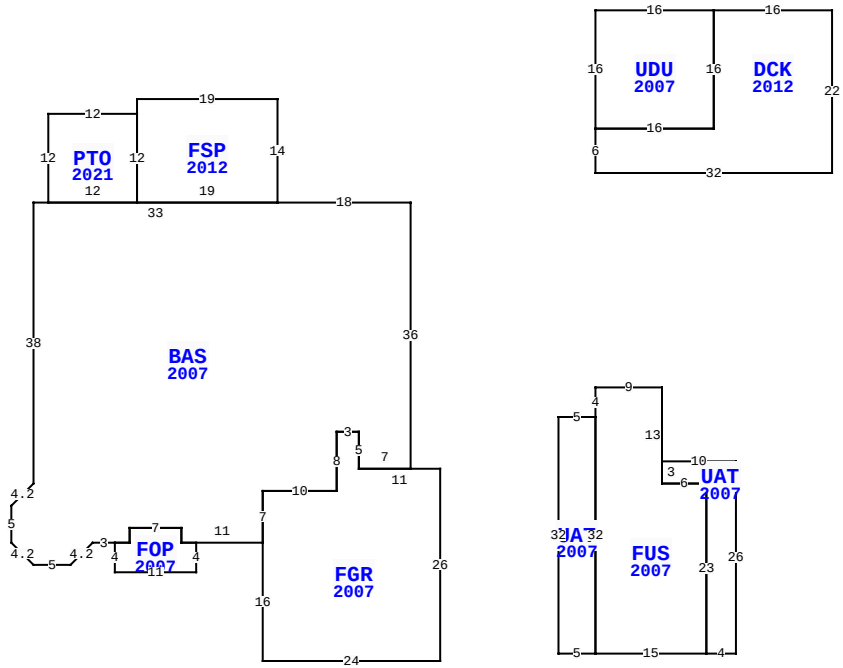

BLD DATE	03/03/2023	NW	LGL DATE
XF DATE			LAND DATE 05/08/2025 MLU
INC DATE			AG DATE

75248 HARVESTER ST, YULEE

VALUATION SUMMARY

VALUATION BY		STANDARD
Tax Group: 4	Tax Dist:	
BUILDING MARKET VALUE		462,291
TOTAL MARKET OB/XF VALUE		41,651
TOTAL LAND VALUE - MARKET		85,000
TOTAL MARKET VALUE		588,942
SOH/AGL Deduction		12,397
ASSESSED VALUE		576,545
TOTAL EXEMPTION VALUE	13	576,545
BASE TAXABLE VALUE		0
TOTAL JUST VALUE		588,942
NCON VALUE		0
INCOME VALUE		
PREVIOUS YEAR MKT VALUE		560,296

PERMIT NUM	DESCRIPTION	AMT	ISSUED
B24587	GARAGE	71,870	04/01/2011
C19697	CO ISSUED	231,528	04/01/2007
B19697	NEW CONSTR	231,528	04/01/2007
E19110	ELEC OTHER	2,000	04/01/2007
P12282	OTHER	0	04/01/2007
R10242	REPAIR/RRF	6,200	04/01/2007

SALES DATA

OFF RECORD Number	DATE	TYPE INST	Q U	V I	RSN CD	SALE PRICE
1618/0779	5/06/2009	WD	Q	I	01	295,000
GRANTOR: SMITH ALBERT D & VIRG						
GRANTEE: PAFFORD JEFFREY M &						
1538/1028	11/30/2007	WD	Q	I		300,000
GRANTOR: NASSAU BUILDERS INC						
GRANTEE: SMITH ALBERT D & VI						

BUILDING NOTES

BUILDING DIMENSIONS

BAS=[YR=2007] W18 FSP=[YR=2012] N14 W19 S2 PTO=[YR=2021] W12 S12 E12 N12$ S12 E19$ W33 S38 L3 D3 S5 R3 D3 E5 U3 R3 E3 FOP=[YR=2007] S4 E11 N4 W2 N2 W7 S2 W2$ E2 N2 E7 S2 E11 FGR=[YR=2007] S16 E24 N26 W11 N5 W3 S8 W10 S7$ N7 E10 N8 E3 S5 E7 N36$ PTR= E25 S25 FUS=[YR=2007] S4 UAT=[YR=2007] W5 S32 E5N32$ S32 E15 UAT=[YR=2007] E4 N26 W10 S3 E6 S23$ N23 W6 N13 W9$ N25 W25 N10 E25 UDU=[YR=2007] E16 N16DCK=[YR=2012] E16 S22 W32 N6 E16 N16 $ W16 S16$ W25 S10 $.

EXTRA FEATURES

LN	OB/XF CODE	DESCRIPTION	BLD	CAP	L	W	UNITS	UT	Adj R	ADJ UNIT PRICE	ORIG COND	YEAR ON	YEAR ACTUAL	Q	% COND	OB/XF MKT VALUE	NOTES
1	0812	CONCRETE C	0	100	0	0	2,361.00	SF	4.00	4.00	100	2007	2007	3	87	8,216	
2	1242	WD DECK A	0	100	7	7	49.00	SF	10.00	10.00	100	2007	2007	3	27	132	
3	0861	POOL GUNIT	0	100	0	0	336.00	SF	85.00	85.00	100	2008	2008	3	48	13,709	
4	0855	CONC PAVER	0	100	0	0	1,107.00	SF	10.00	10.00	100	2008	2008	3	88	9,742	
5	1076	TRELLIS A	0	100	16	12	192.00	SF	7.50	7.50	100	2008	2008	3	48	691	
6	0462	ST/AL FNC	0	100	0	0	990.00	SF	10.00	10.00	100	2008	2008	3	48	4,752	
7	0476	VF 6 SBPL	0	100	0	0	84.00	LF	32.00	32.00	100	2008	2008	3	72	1,935	
8	0810	CONCRETE A	0	100	3	40	120.00	SF	6.50	6.50	100	2011	2011	3	91	710	
9	0911	SCRN RM A	0	100	12	12	144.00	SF	17.50	17.50	100	2016	2016	3	70	1,764	

LAND DESCRIPTION

TOTAL OB/XF 41,651

LN	USE CODE	CLS	LAND USE DESCRIPTION	CAP	RD	LOC ZONE	FRONT	DEPTH	TOT LND UTS	UNIT TYPE	DT	DPTH FACT	% COND	TOT ADJ	UNIT PRICE	ADJ UNIT PRICE	LAND VALUE	OTHER ADJUSTMENTS AND NOTES	YEAR	DENSITY	DECL	FRZ	YR	CONSRV
1	000100	C	RES	100		OR	0.00	0.00	1.00	AC		1.00	1.00	1.00	85,000.00	85,000.00	85,000							

REVIEW DATE 06/13/2022 BY NWA Total Acres: 1.00 Total Land Value: 85,000 Market: 0 Agricultural: 0 Common: 85,000 PRINTED 07/30/2025 BY SYS

E1/2 OF SE1/4
IN OR 1618/779

PAFFORD JEFFREY M & PATRICIA J
75248 HARVESTER ROAD
YULEE, FL 32097

2025

08-2N-27-0000-0005-0330

NASSAU COUNTY PROPERTY

BUILDING CHARACTERISTICS

ELEMENT	CD	CONSTRUCTION
Exterior Wall	10	ABOVE AVG 100
Roof Structur	03	GABLE/HIP 100
Roof Cover	03	COMP SHNGL 100
Interior Wall	05	DRYWALL 100
Interior Floo	03	CONC FINSH 100
Air Condition	01	NONE 100
Heating Type	01	NONE 100
Bedrooms		0 100
Bathrooms		0 100
Frame	02	WOOD FRAME 100
Stories	1.	1. 100
Units		0 100
Occupancy	00	NONE 100
Quality	06	Quality Level 06

DOR CODE	0100	SINGLE FAMILY	
MAP NUM		MKT AREA	04
NEIGHBORHOOD/LOC	4053.00		

AREA TYPE	TOTAL GROSS AREA	PCT OF BASE	YEAR	TOT ADJ AREA	SUBAREA MARKET VALUE
BAS	1,800	100	2012	1,800	51,468
TOTALS	1,800			1,800	51,468

MARKET ADJUSTMENTS

TYPE	MDL	EFF. AREA	TOT ADJ PTS	EFF. BASE RATE	REPL. COST NEW	AYB	EYB	ECON	FNCT		NORM	% COND
6500	01	1,800	92.0000	34.04	61,272	2011	2011	0	0	0	16.00	84.00

2 GARAGE RES – 100% - 2019 Heated Area: 1800 HX Base Yr

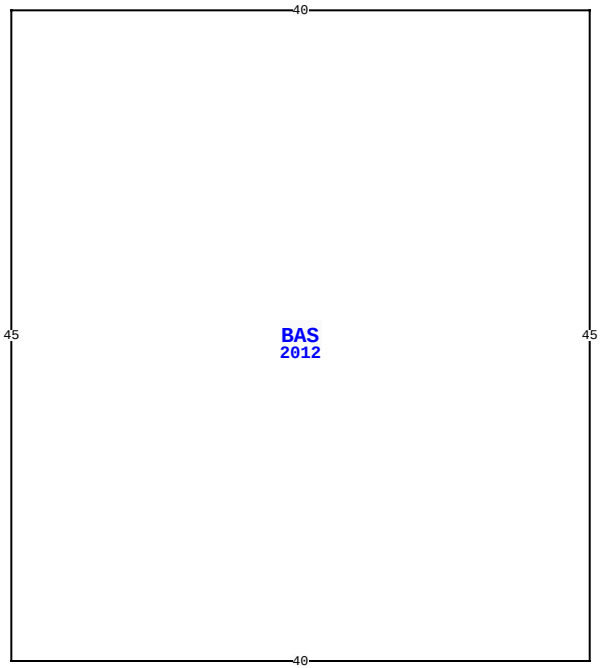

BLD DATE	03/03/2023	NW	LGL DATE
XF DATE			LAND DATE 05/08/2025 MLU
INC DATE			AG DATE

75248 HARVESTER ST, YULEE

NASSAU COUNTY PROPERTY — VALUATION SUMMARY

VALUATION BY		STANDARD
Tax Group: 4	Tax Dist:	
BUILDING MARKET VALUE		462,291
TOTAL MARKET OB/XF VALUE		41,651
TOTAL LAND VALUE - MARKET		85,000
TOTAL MARKET VALUE		588,942
SOH/AGL Deduction		12,397
ASSESSED VALUE		576,545
TOTAL EXEMPTION VALUE	13	576,545
BASE TAXABLE VALUE		0
TOTAL JUST VALUE		588,942
NCON VALUE		0
INCOME VALUE		
PREVIOUS YEAR MKT VALUE		560,296

PERMIT NUM	DESCRIPTION	AMT	ISSUED
M12177	MECH OTHER	0	10/01/2006
C18537	CO ISSUED	175,230	09/01/2006
E18075	ELEC OTHER	2,000	09/01/2006
R09728	REPAIR/RRF	5,400	09/01/2006
P11541	OTHER	0	09/01/2006

SALES DATA

OFF RECORD Number	DATE	TYPE INST	Q U	V I	RSN CD	SALE PRICE
1618/0779	5/06/2009	WD	Q	I	01	295,000
GRANTOR: SMITH ALBERT D & VIRG						
GRANTEE: PAFFORD JEFFREY M &						
1538/1028	11/30/2007	WD	Q	I		300,000
GRANTOR: NASSAU BUILDERS INC						
GRANTEE: SMITH ALBERT D & VI						

BUILDING NOTES

BUILDING DIMENSIONS

BAS=[YR=2012] W40 S45 E40 N45 $.

EXTRA FEATURES

LN	OB/XF CODE	DESCRIPTION	BLD	CAP	L	W	UNITS	UT	Adj R	ADJ UNIT PRICE	ORIG COND	YEAR ON	YEAR ACTUAL	Q	% COND	OB/XF MKT VALUE	NOTES

LAND DESCRIPTION

TOTAL OB/XF 0

LN	USE CODE	CLS	LAND USE DESCRIPTION	CAP	RD	LOC ZONE	FRONT	DEPTH	TOT LND UTS	UNIT TYPE	DT	DPTH FACT	% COND	TOT ADJ	UNIT PRICE	ADJ UNIT PRICE	LAND VALUE	OTHER ADJUSTMENTS AND NOTES	YEAR	DENSITY	DECL	FRZ	YR	CONSRV

REVIEW DATE 06/13/2022 BY NWA Total Acres: 1.00 Total Land Value: 85,000 Market: 0 Agricultural: 0 Common: 85,000 PRINTED 07/30/2025 BY SYS