PT E1/2 OF SE1/4 SEC 8-2N-27E
IN OR 1606/116
ESMTS IN OR 289/106-109 & 112

DELUCA SHAWN J
75420 HARVESTER STREET
YULEE, FL 32097

2025

08-2N-27-0000-0005-0160

NASSAU COUNTY PROPERTY

BUILDING CHARACTERISTICS

ELEMENT	CD	CONSTRUCTION
Exterior Wall	12	CEDAR 100
Roof Structur	03	GABLE/HIP 100
Roof Cover	12	MODULAR MT 100
Interior Wall	05	DRYWALL 100
Interior Floo	14	CARPET 80
Interior Floo	11	CLAY TILE 20
Air Condition	03	CENTRAL 100
Heating Type	04	AIR DUCTED 100
Bedrooms		3 100
Bathrooms		2 100
Frame	02	WOOD FRAME 100
Stories	1.	1. 100
Units		0 100
BUD8 Adjustme	04	DIST 01 100
Occupancy	00	NONE 100
Quality	03	Quality Level 03
DOR CODE	0100	SINGLE FAMILY
MAP NUM		MKT AREA 04
NEIGHBORHOOD/LOC	4053.00	

AREA TYPE	TOTAL GROSS AREA	PCT OF BASE	YEAR	TOT ADJ AREA	SUBAREA MARKET VALUE
BAS	1,656	100	1993	1,656	147,687
BAS	400	100	2007	400	35,673
BAS	264	100	2008	264	23,544
DCK	110	10	1993	11	981
FOP	176	30	1993	53	4,726
FOP	240	30	1993	72	6,421
FOP	72	30	2008	22	1,962
FST	90	55	1993	50	4,459
FST	110	55	2004	60	5,351
UEP	132	60	2004	79	7,046
TOTALS	3,250			2,667	237,850

MARKET ADJUSTMENTS

TYPE	MDL	EFF. AREA	TOT ADJ PTS	EFF. BASE RATE	REPL. COST NEW	AYB	EYB	ECON	FNCT		NORM	% COND
0100	01	2,667	108.0960	108.10	288,303	1982	1989	0	0	0	17.50	82.50

1 SINGLE FAM – 100% - 2000 Heated Area: 2320 HX Base Yr 2000

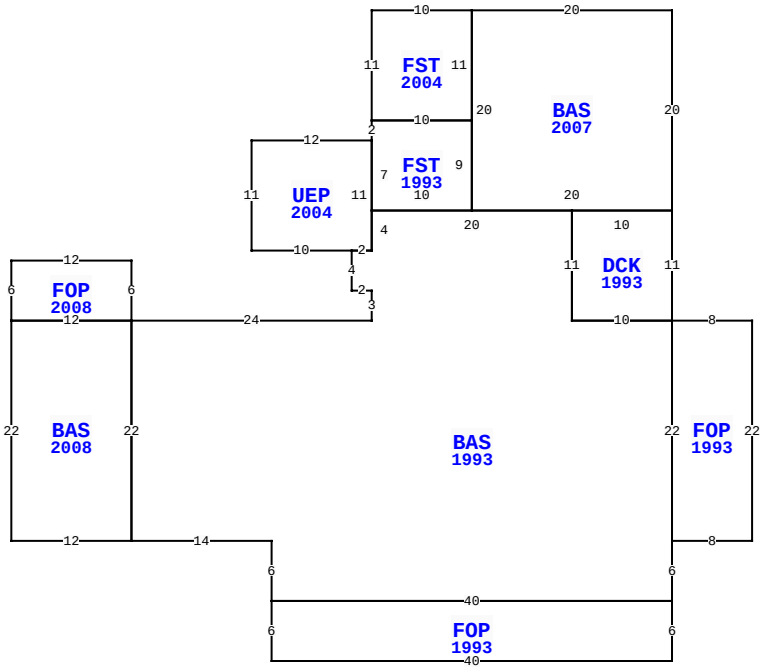

75420 HARVESTER ST, YULEE

BLD DATE		LGL DATE	
XF DATE		LAND DATE	05/08/2025 MLU
INC DATE		AG DATE	

VALUATION SUMMARY

VALUATION BY		STANDARD
Tax Group: 4	Tax Dist:	
BUILDING MARKET VALUE		255,566
TOTAL MARKET OB/XF VALUE		6,493
TOTAL LAND VALUE - MARKET		153,850
TOTAL MARKET VALUE		415,909
SOH/AGL Deduction		191,823
ASSESSED VALUE		224,086
TOTAL EXEMPTION VALUE	HX HB WR	55,722
BASE TAXABLE VALUE		168,364
TOTAL JUST VALUE		415,909
NCON VALUE		0
INCOME VALUE		
PREVIOUS YEAR MKT VALUE		395,989

PERMIT NUM	DESCRIPTION	AMT	ISSUED
R10793	REPAIR/RRF	300	10/01/2007
B20667	ADDITION	17,424	10/01/2007
B0412662	NEW CONSTR	39,600	04/01/2004

SALES DATA

OFF RECORD Number	DATE	TYPE INST	Q / U	V / I	RSN CD	SALE PRICE
1606/0116	2/10/2009	QC	U	I	30	53,500
GRANTOR: DELUCA RALPH A ETAL						
GRANTEE: DELUCA SHAWN J						
0842/0522	7/23/1998	WD	Q	I		120,000
GRANTOR: CLAXTON KENNETH E & L						
GRANTEE: DELUCA SHAWN ETAL						

BUILDING NOTES

BUILDING DIMENSIONS

BAS=[YR=2007] W20 FST=[YR=2004] W10 S11 FST=[YR=1993] S2 UEP=[YR=2004] W12 S11 E10 BAS=[YR=1993] S4 E2 S3 W24 FOP=[YR=2008] N6 W12 S6 E12$ BAS=[YR=2008] W12 S22 E12 N22$ S22 E14 S6 FOP=[YR=1993] S6 E40 N6 W40 $ E40 N6 FOP=[YR=1993] E8 N22 W8 DCK=[YR=1993] N11 W10 S11 E10 $ S22 $ N22 W10 N11 W20 S4 W2 $ E2 N11 $ S7 E10 N9 W10 $ E10 N11 $ S20 E20 N20 $.

EXTRA FEATURES

LN	OB/XF CODE	DESCRIPTION	BLD	CAP	L	W	UNITS	UT	Adj R	ADJ UNIT PRICE	ORIG COND	YEAR ON	YEAR ACTUAL	Q	% COND	OB/XF MKT VALUE	NOTES
1	0500	FP-PRE FAB	0	100	0	0	1.00	UT	3,500.00	3,500.00	100	1982	1982	3	49	1,715	
2	0810	CONCRETE A	0	100	30	20	600.00	SF	6.50	6.50	100	2006	2006	3	86	3,354	
3	0810	CONCRETE A	0	100	22	12	264.00	SF	6.50	6.50	100	2004	2004	3	83	1,424	

LAND DESCRIPTION

TOTAL OB/XF 6,493

LN	USE CODE	CLS	LAND USE DESCRIPTION	CAP	RD	LOC ZONE	FRONT	DEPTH	TOT LND UTS	UNIT TYPE	DT	DPTH FACT	% COND	TOT ADJ	UNIT PRICE	ADJ UNIT PRICE	LAND VALUE	OTHER ADJUSTMENTS AND NOTES	YEAR	DENSITY	DECL	FRZ	YR	CONSRV
1	000100	C	RES	100		OR	0.00	0.00	1.81	AC		1.00	1.00	1.00	85,000.00	85,000.00	153,850							

REVIEW DATE 01/29/2020 BY NWX Total Acres: 1.81 Total Land Value: 153,850 Market: 0 Agricultural: 0 Common: 153,850 PRINTED 07/30/2025 BY SYS

PT E1/2 OF SE1/4 SEC 8-2N-27E
IN OR 1606/116
ESMTS IN OR 289/106-109 & 112

DELUCA SHAWN J
75420 HARVESTER STREET
YULEE, FL 32097

2025

08-2N-27-0000-0005-0160

NASSAU COUNTY PROPERTY

BUILDING CHARACTERISTICS

ELEMENT	CD	CONSTRUCTION
Exterior Wall	25	MOD METAL 100
Roof Structur	03	GABLE/HIP 100
Roof Cover	12	MODULAR MT 100
Interior Wall	01	MINIMUM 100
Interior Floo	03	CONC FINSH 100
Air Condition	01	NONE 100
Heating Type	01	NONE 100
Bedrooms		0 100
Bathrooms		0 100
Frame	02	WOOD FRAME 100
Stories	1.	1. 100
Units		0 100
Occupancy	00	NONE 100
Quality	03	Quality Level 03

DOR CODE	0100	SINGLE FAMILY	
MAP NUM		MKT AREA	04
NEIGHBORHOOD/LOC	4053.00		

AREA TYPE	TOTAL GROSS AREA	PCT OF BASE	YEAR	TOT ADJ AREA	SUBAREA MARKET VALUE
BAS	1,200	100	2004	1,200	17,716
TOTALS	1,200			1,200	17,716

MARKET ADJUSTMENTS

TYPE	MDL	EFF. AREA	TOT ADJ PTS	EFF. BASE RATE	REPL. COST NEW	AYB	EYB	ECON	FNCT		NORM	% COND
6500	01	1,200	57.0000	21.09	25,308	2004	2004	0	0	0	30.00	70.00

2 GARAGE RES – 100% - 2000 Heated Area: 1200 HX Base Yr 2000

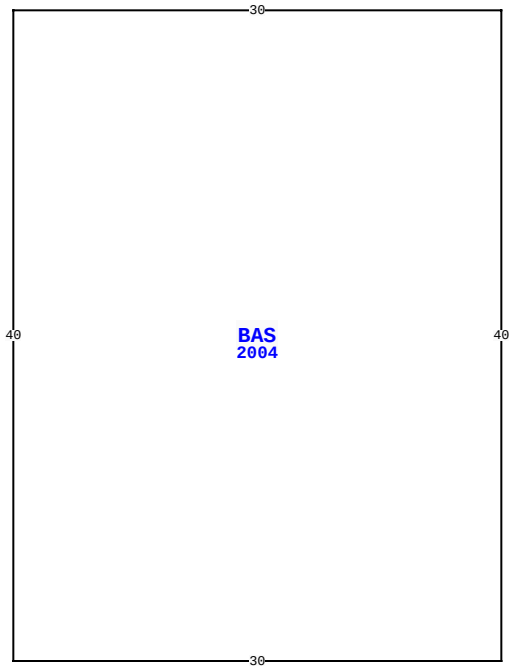

75420 HARVESTER ST, YULEE

BLD DATE		LGL DATE	
XF DATE		LAND DATE	05/08/2025 MLU
INC DATE		AG DATE	

NASSAU COUNTY PROPERTY — VALUATION SUMMARY

VALUATION BY		STANDARD
Tax Group: 4	Tax Dist:	
BUILDING MARKET VALUE		255,566
TOTAL MARKET OB/XF VALUE		6,493
TOTAL LAND VALUE - MARKET		153,850
TOTAL MARKET VALUE		415,909
SOH/AGL Deduction		191,823
ASSESSED VALUE		224,086
TOTAL EXEMPTION VALUE	HX HB WR	55,722
BASE TAXABLE VALUE		168,364
TOTAL JUST VALUE		415,909
NCON VALUE		0
INCOME VALUE		
PREVIOUS YEAR MKT VALUE		395,989

PERMIT NUM	DESCRIPTION	AMT	ISSUED

SALES DATA

OFF RECORD Number	DATE	TYPE INST	Q / U	V / I	RSN CD	SALE PRICE
1606/0116	2/10/2009	QC	U	I	30	53,500
GRANTOR: DELUCA RALPH A ETAL						
GRANTEE: DELUCA SHAWN J						
0842/0522	7/23/1998	WD	Q	I		120,000
GRANTOR: CLAXTON KENNETH E & L						
GRANTEE: DELUCA SHAWN ETAL						

BUILDING NOTES

BUILDING DIMENSIONS

BAS=[YR=2004] W30 S40 E30 N40 $.

EXTRA FEATURES

L N	OB/XF CODE	DESCRIPTION	BLD	CAP	L	W	UNITS	UT	Adj R	ADJ UNIT PRICE	ORIG COND	YEAR ON	YEAR ACTUAL	Q	% COND	OB/XF MKT VALUE	NOTES

LAND DESCRIPTION

TOTAL OB/XF 0

L N	USE CODE	CLS	LAND USE DESCRIPTION	CAP	R D	LOC ZONE	FRONT	DEPTH	TOT LND UTS	UNIT TYPE	D T	DPTH FACT	% COND	TOT ADJ	UNIT PRICE	ADJ UNIT PRICE	LAND VALUE	OTHER ADJUSTMENTS AND NOTES	YEAR	DENSITY	DECL	FRZ	YR	CONSRV

REVIEW DATE 01/29/2020 BY NWX Total Acres: 1.81 Total Land Value: 153,850 Market: 0 Agricultural: 0 Common: 153,850 PRINTED 07/30/2025 BY SYS