LOT 52
CORNWALL SURVEY

FREDERICK SUE V
27234 GEORGIA STREET
HILLIARD, FL 32046

2025

07-3N-24-2020-0052-0000

NASSAU COUNTY PROPERTY

BUILDING CHARACTERISTICS

ELEMENT	CD	CONSTRUCTION
Exterior Wall	19	COMMON BRK 100
Roof Structur	03	GABLE/HIP 100
Roof Cover	03	COMP SHNGL 100
Interior Wall	05	DRYWALL 100
Interior Floo	14	CARPET 90
Interior Floo	11	CLAY TILE 10
Air Condition	03	CENTRAL 100
Heating Type	04	AIR DUCTED 100
Bedrooms		3 100
Bathrooms		2.5 100
Frame	02	WOOD FRAME 100
Stories	1.	1. 100
Units		0 100
BUD8 Adjustme	04	DIST 01 100
Occupancy	00	NONE 100
Quality	03	Quality Level 03

DOR CODE	5000	IMPROVED AG	
MAP NUM		MKT AREA	09
NEIGHBORHOOD/LOC	9001.00		

AREA TYPE	TOTAL GROSS AREA	PCT OF BASE	YEAR	TOT ADJ AREA	SUBAREA MARKET VALUE
BAS	1,908	100	1993	1,908	152,428
BAS	144	100	2004	144	11,504
BAS	500	100	2004	500	39,945
DCK	360	10	2004	36	2,876
FOP	90	30	1993	27	2,157
UDG	900	55	1993	495	39,545
TOTALS	3,902			3,110	248,455

MARKET ADJUSTMENTS

TYPE	MDL	EFF. AREA	TOT ADJ PTS	EFF. BASE RATE	REPL. COST NEW	AYB	EYB	ECON	FNCT		NORM	% COND
0100	01	3,110	112.5160	112.52	349,937	1975	1986	0	0	0	29.00	71.00

1 SINGLE FAM – 100% - 0 Heated Area: 2552 HX Base Yr

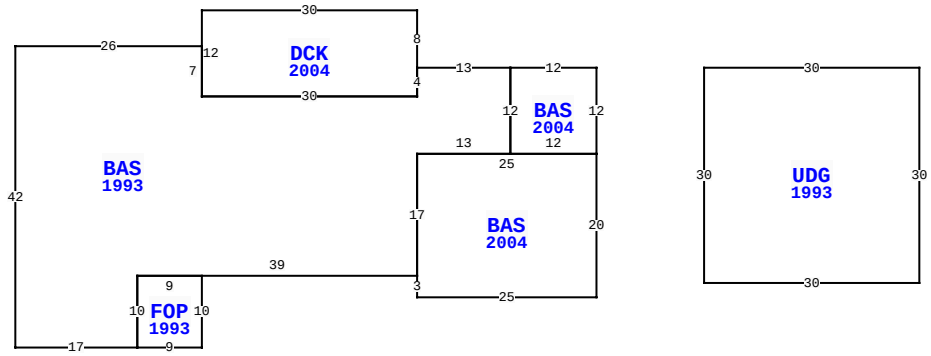

27234 GEORGIA ST, HILLIARD

BLD DATE		LGL DATE	
XF DATE		LAND DATE	05/21/2025 MLU
INC DATE		AG DATE	01/17/2025 KBA

VALUATION SUMMARY

VALUATION BY		STANDARD
Tax Group: 4	Tax Dist:	
BUILDING MARKET VALUE		248,455
TOTAL MARKET OB/XF VALUE		8,680
TOTAL LAND VALUE - MARKET		220,500
TOTAL MARKET VALUE		306,705
SOH/AGL Deduction		141,553
ASSESSED VALUE		165,152
TOTAL EXEMPTION VALUE	SX HX HB WX	105,722
BASE TAXABLE VALUE		59,430
TOTAL JUST VALUE		477,635
NCON VALUE		0
INCOME VALUE		
PREVIOUS YEAR MKT VALUE		447,508

PERMIT NUM	DESCRIPTION	AMT	ISSUED

SALES DATA

OFF RECORD Number	DATE	TYPE INST	Q / U	V / I	RSN CD	SALE PRICE
0107/0712	1/01/1970	TA	Q	V		3,000

GRANTOR:

GRANTEE:

BUILDING NOTES

BUILDING DIMENSIONS

BAS=[YR=2004] W12 BAS=[YR=1993] W13 DCK=[YR=2004] N8 W30 S12 E30 N4 $ S4 W30 N7 W26 S42 E17 FOP=[YR=1993] E9 N10 W9 S10 $ N10 E39 BAS=[YR=2004] S3 E25 N20 W25 S17 $ N17 E13 N12 $ S12 E12 N12 $ PTR= E15 UDG=[YR=1993] E30 S30 W30 N30 $ W15 $.

EXTRA FEATURES

LN	OB/XF CODE	DESCRIPTION	BLD	CAP	L	W	UNITS	UT	Adj R	ADJ UNIT PRICE	ORIG COND	YEAR ON	YEAR ACTUAL	Q	% COND	OB/XF MKT VALUE	NOTES
1	0500	FP-PRE FAB	0	100	0	0	1.00	UT	3,500.00	3,500.00	100	1975	1975	3	34	1,190	
2	0810	CONCRETE A	0	100	16	10	160.00	SF	6.50	6.50	100	1975	1975	3	25	260	
3	0812	CONCRETE C	0	100	0	0	1,544.00	SF	4.00	4.00	100	2003	2003	3	82	5,064	
4	0912	SCRN RM G	0	100	21	21	441.00	SF	20.00	20.00	100	1992	1992	3	20	1,764	
5	0940	SHEDS/PORT	0	100	10	10	100.00	SF	20.10	20.10	100	1997	1997	3	20	402	

LAND DESCRIPTION

TOTAL OB/XF 8,680

LN	USE CODE	CLS	LAND USE DESCRIPTION	CAP	RD	LOC ZONE	FRONT	DEPTH	TOT LND UTS	UNIT TYPE	DT	DPTH FACT	% COND	TOT ADJ	UNIT PRICE	ADJ UNIT PRICE	LAND VALUE	OTHER ADJUSTMENTS AND NOTES	YEAR	DENSITY	DECL	FRZ	YR	CONSRV
1	005000	C	AGRICULTURAL	100		OR	0.00	0.00	1.00	AC		1.00	1.00	1.00	45,000.00	45,000.00	45,000							
2	005500	A	TIMBER 2 N S	0		OR	0.00	0.00	8.00	AC		1.00	1.00	1.00	525.00	525.00	4,200							
3	006000	A	PASTURE - HA	0		OR	0.00	0.00	1.00	AC		1.00	1.00	1.00	370.00	370.00	370							
4	009910	M	MARKET VALUE	0		OR	0.00	0.00	9.00	AC		1.00	1.00	1.00	19,500.00	19,500.00	175,500							

REVIEW DATE 05/18/2021 BY TWA Total Acres: 10.00 Total Land Value: 49,570 Market: 175,500 Agricultural: 4,570 Common: 45,000 PRINTED 07/30/2025 BY SYS