PT OF LOTS 11 & 12
IN OR 685/1977 & OR 2565/1184
PLEASANT PARK PB 2/21

JORDAN ROBERT W & DEBORAH V
552429 U S HIGHWAY 1
HILLIARD, FL 32046

2025

05-3N-24-2360-0011-0010

BUILDING CHARACTERISTICS

ELEMENT	CD	CONSTRUCTION
Exterior Wall	20	FACE BRICK 100
Roof Structur	08	IRREGULAR 100
Roof Cover	03	COMP SHNGL 100
Interior Wall	05	DRYWALL 100
Interior Floo	14	CARPET 70
Interior Floo	11	CLAY TILE 30
Air Condition	03	CENTRAL 100
Heating Type	04	AIR DUCTED 100
Bedrooms		3 100
Bathrooms		2 100
Frame	02	WOOD FRAME 100
Stories	1.	1. 100
Units		0 100
Occupancy	00	NONE 100
Quality	01	Quality Level 01
DOR CODE	0100	SINGLE FAMILY
MAP NUM		MKT AREA 09
NEIGHBORHOOD/LOC	9001.00	

AREA TYPE	TOTAL GROSS AREA	PCT OF BASE	YEAR	TOT ADJ AREA	SUBAREA MARKET VALUE
BAS	2,314	100	1995	2,314	242,157
FGR	529	55	1995	291	30,452
FOP	50	30	1995	15	1,569
FOP	160	30	1995	48	5,023
PTO	319	5	2017	16	1,674
UOP	174	20	2017	35	3,663
TOTALS	3,546			2,719	284,539

MARKET ADJUSTMENTS

TYPE	MDL	EFF. AREA	TOT ADJ PTS	EFF. BASE RATE	REPL. COST NEW	AYB	EYB	ECON	FNCT		NORM	% COND
0900	01	2,719	96.6816	127.62	346,999	1995	2000	0	0	0	18.00	82.00

1 SNGL FAM – 100% - 1996 Heated Area: 2314 HX Base Yr 1996

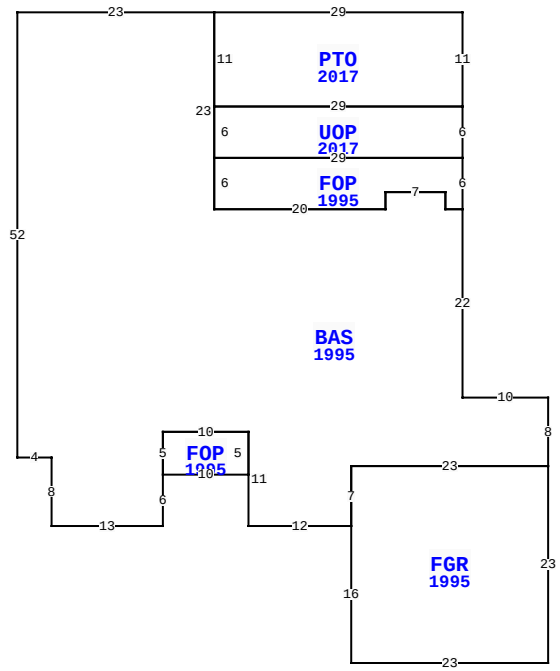

552429 US HWY 1, HILLIARD

BLD DATE		LGL DATE	
XF DATE		LAND DATE	05/09/2025 MLU
INC DATE		AG DATE	

NASSAU COUNTY PROPERTY

PAGE 1 of 1 4

VALUATION SUMMARY

VALUATION BY		STANDARD
Tax Group: 4	Tax Dist:	
BUILDING MARKET VALUE		284,539
TOTAL MARKET OB/XF VALUE		10,478
TOTAL LAND VALUE - MARKET		95,100
TOTAL MARKET VALUE		390,117
SOH/AGL Deduction		228,906
ASSESSED VALUE		161,211
TOTAL EXEMPTION VALUE	HX HB	50,722
BASE TAXABLE VALUE		110,489
TOTAL JUST VALUE		390,117
NCON VALUE		0
INCOME VALUE		
PREVIOUS YEAR MKT VALUE		361,809

PERMIT NUM	DESCRIPTION	AMT	ISSUED
17007349	REPAIR/RRF	12,600	11/21/2017
B951769	NEW CONSTR	104,000	03/03/1995

SALES DATA

OFF RECORD Number	DATE	TYPE INST	Q / U	V / I	RSN CD	SALE PRICE
2565/1184	5/25/2022	QC	U	V	11	100
GRANTOR: VANZANT JOHN KEVIN						
GRANTEE: JORDAN ROBERT WAYNE						
0685/1977	8/03/1993	WD	Q	I	01	100
GRANTOR: VANZANT CATHERINE J						
GRANTEE: JORDAN ROBT &DEBORA						

BUILDING NOTES

BUILDING DIMENSIONS

PTO=[YR=2017] W29 BAS=[YR=1995] W23 S52 E4 S8 E13 N6 FOP=[YR=1995] E10 N5 W10 S5$ N5 E10 S11 E12 FGR=[YR=1995] S16 E23 N23 W23 S7$ N7 E23 N8 W10 N22 FOP=[YR=1995] N6 UOP=[YR=2017] N6 W29 S6 E29$ W29 S6 E20 N2 E7 S2 E2 $ W2 N2 W7 S2 W20 N23$ S11 E29 N11$.

EXTRA FEATURES

LN	OB/XF CODE	DESCRIPTION	BLD	CAP	L	W	UNITS	UT	Adj R	ADJ UNIT PRICE	ORIG COND	YEAR ON	YEAR ACTUAL	Q	% COND	OB/XF MKT VALUE	NOTES
1	0812	CONCRETE C	0	100	0	0	1,311.00	SF	4.00	4.00	100	1995	1995	3	68	3,566	
2	0811	CONCRETE B	0	100	0	0	900.00	SF	5.20	5.20	100	2010	2010	3	90	4,212	
3	0681	POLE SHED	0	100	0	0	720.00	SF	15.00	15.00	100	1985	1985	3	20	2,160	
4	0749	M/H STORG	0	100	0	0	1.00	UT	2,000.00	2,000.00	100	2000	2000	3	27	540	

LAND DESCRIPTION

TOTAL OB/XF 10,478

LN	USE CODE	CLS	LAND USE DESCRIPTION	CAP	RD	LOC ZONE	FRONT	DEPTH	TOT LND UTS	UNIT TYPE	DT	DPTH FACT	% COND	TOT ADJ	UNIT PRICE	ADJ UNIT PRICE	LAND VALUE	OTHER ADJUSTMENTS AND NOTES	YEAR	DENSITY	DECL	FRZ	YR	CONSRV
1	000100	C	RES	100	0004	RMH	0.00	0.00	3.17	AC		1.00	1.00	1.00	30,000.00	30,000.00	95,100							

REVIEW DATE 08/16/2022 BY TWA Total Acres: 3.17 Total Land Value: 95,100 Market: 0 Agricultural: 0 Common: 95,100 PRINTED 07/30/2025 BY SYS