LOT 3
IN OR 1775/1765
DAVIS ACRES PB 5/58

RAY SHERRY THOMAS
37848 KINGS FERRY RD
HILLIARD, FL 32046

2025

04-3N-24-2300-0003-0000

BUILDING CHARACTERISTICS

ELEMENT	CD	CONSTRUCTION
Exterior Wall	10	ABOVE AVG 80
Exterior Wall	20	FACE BRICK 20
Roof Structur	08	IRREGULAR 100
Roof Cover	03	COMP SHNGL 100
Interior Wall	05	DRYWALL 100
Interior Floo	14	CARPET 70
Interior Floo	11	CLAY TILE 30
Air Condition	03	CENTRAL 100
Heating Type	04	AIR DUCTED 100
Bedrooms		5 100
Bathrooms		4 100
Frame	02	WOOD FRAME 100
Stories	1.	1. 100
Units		0 100
Occupancy	00	NONE 100
Quality	02	Quality Level 02
DOR CODE	0100	SINGLE FAMILY
MAP NUM		MKT AREA 09
NEIGHBORHOOD/LOC	9001.00	

AREA TYPE	TOTAL GROSS AREA	PCT OF BASE	YEAR	TOT ADJ AREA	SUBAREA MARKET VALUE
BAS	1,216	100	2006	1,216	143,943
BAS	1,785	100	2006	1,785	211,298
FGR	675	55	2006	371	43,917
FOP	115	30	2006	34	4,025
FOP	138	30	2006	41	4,854
FOP	328	30	2006	98	11,600
TOTALS	4,257			3,545	419,636

MARKET ADJUSTMENTS

TYPE	MDL	EFF. AREA	TOT ADJ PTS	EFF. BASE RATE	REPL. COST NEW	AYB	EYB	ECON	FNCT		NORM	% COND
0900	01	3,545	99.0945	130.80	463,686	2006	2006	0	0	0	9.50	90.50

1 SNGL FAM – 100% - 2012 Heated Area: 3001 HX Base Yr 2012

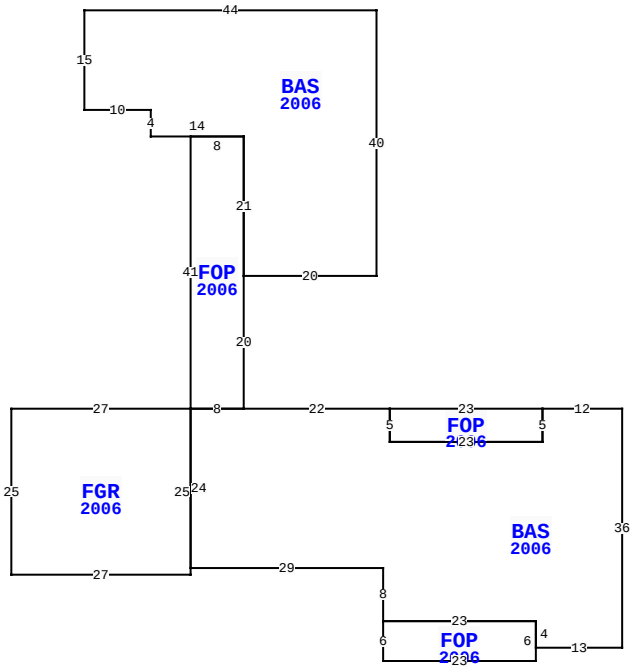

37848 KINGS FERRY RD, HILLIARD

BLD DATE		LGL DATE	
XF DATE		LAND DATE	05/09/2025 MLU
INC DATE		AG DATE	

NASSAU COUNTY PROPERTY

PAGE 1 of 2 4

VALUATION SUMMARY

VALUATION BY		STANDARD
Tax Group: 4	Tax Dist:	
BUILDING MARKET VALUE		463,458
TOTAL MARKET OB/XF VALUE		23,971
TOTAL LAND VALUE - MARKET		139,425
TOTAL MARKET VALUE		626,854
SOH/AGL Deduction		259,752
ASSESSED VALUE		367,102
TOTAL EXEMPTION VALUE	HX HB	50,722
BASE TAXABLE VALUE		316,380
TOTAL JUST VALUE		626,854
NCON VALUE		0
INCOME VALUE		
PREVIOUS YEAR MKT VALUE		609,050

PERMIT NUM	DESCRIPTION	AMT	ISSUED
B24713	GARAGE	46,872	05/01/2011
M11280	MECH OTHER	0	03/01/2006
P10913	OTHER	0	03/01/2006
C17176	CO ISSUED	292,826	02/01/2006
B17176	NEW CONSTR	292,826	02/01/2006
E16846	ELEC OTHER	7,000	02/01/2006

SALES DATA

OFF RECORD Number	DATE	TYPE INST	Q U /	V I /	RSN CD	SALE PRICE
1775/1765	12/31/2009	QC	U	I	11	162,200
GRANTOR: THOMAS REBECCA						
GRANTEE: RAY SHERRY THOMAS						
1310/0467	4/18/2005	WD	Q	V		85,800
GRANTOR: DAVIS JAMES F						
GRANTEE: THOMAS REBECCA						

BUILDING NOTES

BUILDING DIMENSIONS

BAS=[YR=2006] W12 FOP=[YR=2006] W23 S5 E23 N5$ S5 W23 N5 W22 FOP=[YR=2006] N20 BAS=[YR=2006] E20 N40 W44 S15 E10 S4 E14 S21$ N21 W8 S41 E8$ W8 FGR=[YR=2006] W27 S25 E27 N25$ S24 E29 S8 FOP=[YR=2006] S6 E23 N6 W23$ E23 S4 E13 N36$.

EXTRA FEATURES

LN	OB/XF CODE	DESCRIPTION	BLD	CAP	L	W	UNITS	UT	Adj R	ADJ UNIT PRICE	ORIG COND	YEAR ON	YEAR ACTUAL	Q	% COND	OB/XF MKT VALUE	NOTES
1	0811	CONCRETE B	0	100	0	0	791.00	SF	5.20	5.20	100	2006	2006	3	86	3,537	
2	0940	SHEDS/PORT	0	100	12	8	96.00	SF	30.00	30.00	100	2007	2007	3	27	778	
3	0812	CONCRETE C	0	100	0	0	5,460.00	SF	4.00	4.00	100	2010	2010	3	90	19,656	

LAND DESCRIPTION

TOTAL OB/XF 23,971

LN	USE CODE	CLS	LAND USE DESCRIPTION	CAP	RD	LOC ZONE	FRONT	DEPTH	TOT LND UTS	UNIT TYPE	DT	DPTH FACT	% COND	TOT ADJ	UNIT PRICE	ADJ UNIT PRICE	LAND VALUE	OTHER ADJUSTMENTS AND NOTES	YEAR	DENSITY	DECL	FRZ	YR	CONSRV
1	000100	C	RES	100	0006	OR	0.00	0.00	7.15	AC		1.00	1.00	1.00	19,500.00	19,500.00	139,425							

REVIEW DATE 09/18/2019 BY TWA Total Acres: 7.15 Total Land Value: 139,425 Market: 0 Agricultural: 0 Common: 139,425 PRINTED 07/30/2025 BY SYS

LOT 3
IN OR 1775/1765
DAVIS ACRES PB 5/58

RAY SHERRY THOMAS
37848 KINGS FERRY RD
HILLIARD, FL 32046

2025

04-3N-24-2300-0003-0000

NASSAU COUNTY PROPERTY

BUILDING CHARACTERISTICS

ELEMENT	CD	CONSTRUCTION
Exterior Wall	10	ABOVE AVG 100
Roof Structur	03	GABLE/HIP 100
Roof Cover	03	COMP SHNGL 100
Interior Wall	05	DRYWALL 100
Interior Floo	08	SHT VINYL 100
Air Condition	03	CENTRAL 100
Heating Type	04	AIR DUCTED 100
Bedrooms		0 100
Bathrooms		0 100
Frame	02	WOOD FRAME 100
Stories	0	0 100
Units		0 100
Occupancy	00	NONE 100
Quality	03	Quality Level 03

DOR CODE 0100 SINGLE FAMILY
MAP NUM
MKT AREA 09
NEIGHBORHOOD/LOC 9001.00

AREA TYPE	TOTAL GROSS AREA	PCT OF BASE	YEAR	TOT ADJ AREA	SUBAREA MARKET VALUE
BAS	1,200	100	2013	1,200	43,822
TOTALS	1,200			1,200	43,822

MARKET ADJUSTMENTS

TYPE	MDL	EFF. AREA	TOT ADJ PTS	EFF. BASE RATE	REPL. COST NEW	AYB	EYB	ECON	FNCT		NORM	% COND
6500	01	1,200	103.8800	38.44	46,128	2013	2019	0	0	0	5.00	95.00

2 GARAGE RES – 100% - 2012 Heated Area: 1200 HX Base Yr 2012

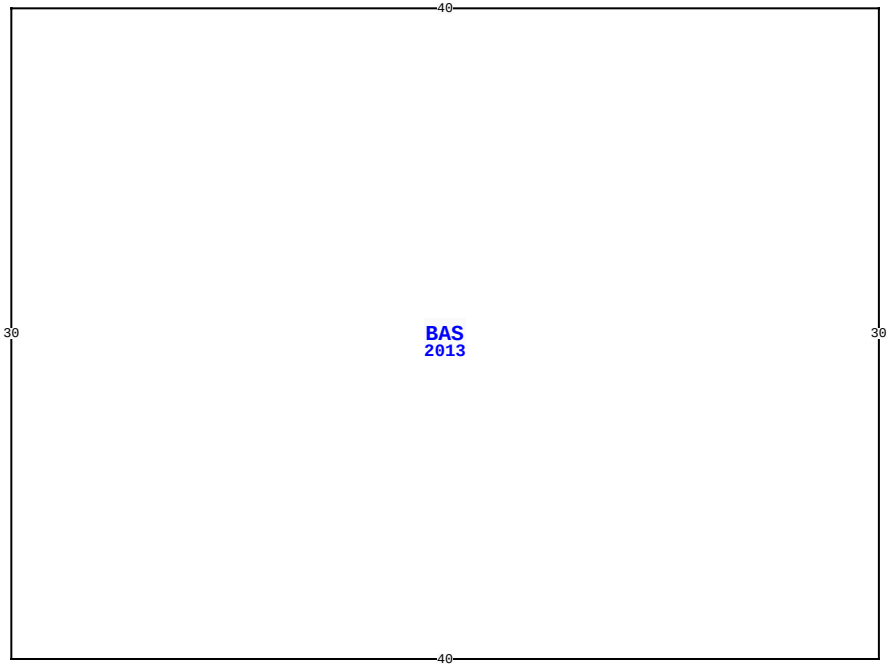

37848 KINGS FERRY RD, HILLIARD

BLD DATE		LGL DATE	
XF DATE		LAND DATE	05/09/2025 MLU
INC DATE		AG DATE	

VALUATION SUMMARY

VALUATION BY		STANDARD
Tax Group: 4	Tax Dist:	
BUILDING MARKET VALUE		463,458
TOTAL MARKET OB/XF VALUE		23,971
TOTAL LAND VALUE - MARKET		139,425
TOTAL MARKET VALUE		626,854
SOH/AGL Deduction		259,752
ASSESSED VALUE		367,102
TOTAL EXEMPTION VALUE	HX HB	50,722
BASE TAXABLE VALUE		316,380
TOTAL JUST VALUE		626,854
NCON VALUE		0
INCOME VALUE		
PREVIOUS YEAR MKT VALUE		609,050

PERMIT NUM	DESCRIPTION	AMT	ISSUED
R08954	REPAIR/RRF	5,000	02/01/2006

SALES DATA

OFF RECORD Number	DATE	TYPE INST	Q / U	V / I	RSN CD	SALE PRICE
1775/1765	12/31/2009	QC	U	I	11	162,200
GRANTOR: THOMAS REBECCA						
GRANTEE: RAY SHERRY THOMAS						
1310/0467	4/18/2005	WD	Q	V		85,800
GRANTOR: DAVIS JAMES F						
GRANTEE: THOMAS REBECCA						

BUILDING NOTES

BUILDING DIMENSIONS

BAS=[YR=2013] W40 S30 E40 N30$.

EXTRA FEATURES

L N	OB/XF CODE	DESCRIPTION	BLD	CAP	L	W	UNITS	UT	Adj R	ADJ UNIT PRICE	ORIG COND	YEAR ON	YEAR ACTUAL	Q	% COND	OB/XF MKT VALUE	NOTES

LAND DESCRIPTION

TOTAL OB/XF 0

L N	USE CODE	CLS	LAND USE DESCRIPTION	CAP	R D	LOC ZONE	FRONT	DEPTH	TOT LND UTS	UNIT TYPE	D T	DPTH FACT	% COND	TOT ADJ	UNIT PRICE	ADJ UNIT PRICE	LAND VALUE	OTHER ADJUSTMENTS AND NOTES	YEAR	DENSITY	DECL	FRZ	YR	CONSRV

REVIEW DATE 09/18/2019 BY TWA Total Acres: 7.15 Total Land Value: 139,425 Market: 0 Agricultural: 0 Common: 139,425 PRINTED 07/30/2025 BY SYS