PT OF S1/2
IN OR 752/867
ESMT OR 1236/1430

SELDOMRIDGE MICHAEL & DAWN M
17366 PARADISE DRIVE
HILLIARD, FL 32046

2025

04-3N-23-0000-0003-0040

NASSAU COUNTY PROPERTY

BUILDING CHARACTERISTICS

ELEMENT	CD	CONSTRUCTION
Exterior Wall	20	FACE BRICK 100
Roof Structur	03	GABLE/HIP 100
Roof Cover	03	COMP SHNGL 100
Interior Wall	05	DRYWALL 100
Interior Floo	14	CARPET 100
Air Condition	03	CENTRAL 100
Heating Type	04	AIR DUCTED 100
Bedrooms		1 100
Bathrooms		1 100
Frame	02	WOOD FRAME 100
Stories	1.	1. 100
Units		0 100
Occupancy	00	NONE 100
Quality	01	Quality Level 01

DOR CODE 0100 SINGLE FAMILY
MAP NUM | MKT AREA 09
NEIGHBORHOOD/LOC 9001.00

AREA TYPE	TOTAL GROSS AREA	PCT OF BASE	YEAR	TOT ADJ AREA	SUBAREA MARKET VALUE
AOF	243	110	1998	267	33,679
HXB	625	100	1995	625	78,837
HXG	648	55	1995	356	44,905
HXP	66	30	1995	20	2,523
TOTALS	1,582			1,268	159,945

MARKET ADJUSTMENTS

TYPE	MDL	EFF. AREA	TOT ADJ PTS	EFF. BASE RATE	REPL. COST NEW	AYB	EYB	ECON	FNCT		NORM	% COND
0500	01	1,268	102.0240	161.20	204,402	1995	1995	0	0	0	21.75	78.25

1 SFR CUST – 78.94% - 0 Heated Area: 868 HX Base Yr 1996

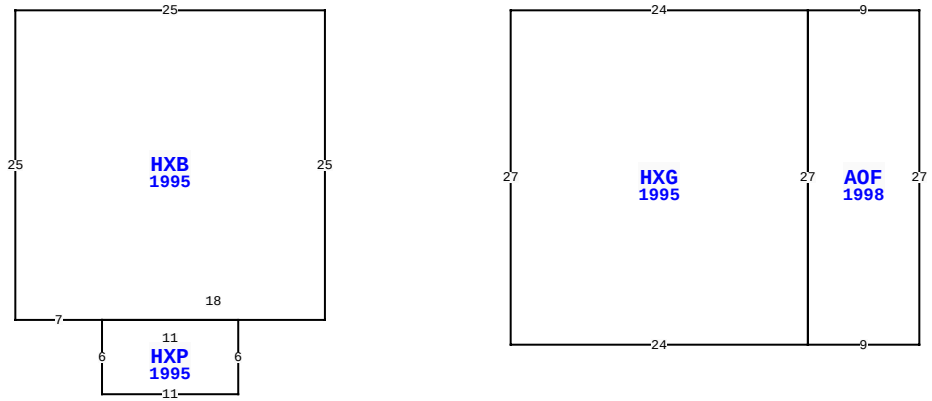

17366 PARADISE DR, HILLIARD

BLD DATE	07/24/2015 KK	LGL DATE	
XF DATE		LAND DATE	05/09/2025 MLU
INC DATE		AG DATE	

NASSAU COUNTY PROPERTY — VALUATION SUMMARY

VALUATION BY		STANDARD
Tax Group: 4	Tax Dist:	
BUILDING MARKET VALUE		708,283
TOTAL MARKET OB/XF VALUE		15,934
TOTAL LAND VALUE - MARKET		133,200
TOTAL MARKET VALUE		857,417
SOH/AGL Deduction		485,274
ASSESSED VALUE		372,143
TOTAL EXEMPTION VALUE	HX HB	50,722
BASE TAXABLE VALUE		321,421
TOTAL JUST VALUE		857,417
NCON VALUE		0
INCOME VALUE		
PREVIOUS YEAR MKT VALUE		809,274

PERMIT NUM	DESCRIPTION	AMT	ISSUED
M026042	ADDITION	0	06/01/2002
R013466	REPAIR/RRF	0	08/01/2001

SALES DATA

OFF RECORD Number	DATE	TYPE INST	Q / U	V / I	RSN CD	SALE PRICE
0752/0867	2/26/1996	WD	U	V	07	100

GRANTOR: COGBURN LARRY & BARBA
GRANTEE: SELDOMRIDGE MICHAEL

BUILDING NOTES

BUILDING DIMENSIONS

HXB=[YR=1995] W25 S25 E7 HXP=[YR=1995] S6 E11 N6 W11$ E18 N25$ PTR=E15 HXG=[YR=1995] E24 AOF=[YR=1998] E9 S27W9 N27 $ S27 W24 N27 $ W15 $.

EXTRA FEATURES

LN	OB/XF CODE	DESCRIPTION	BLD	CAP	L	W	UNITS	UT	Adj R	ADJ UNIT PRICE	ORIG COND	YEAR ON	YEAR ACTUAL	Q	% COND	OB/XF MKT VALUE	NOTES
1	0812	CONCRETE C	0	100	0	0	1,237.00	SF	4.00	4.00	100	2003	2003	3	82	4,057	
2	0812	CONCRETE C	0	100	0	0	1,080.00	SF	4.00	4.00	100	1997	1997	3	72	3,110	
3	0940	SHEDS/PORT	0	100	12	12	144.00	SF	30.00	30.00	100	1997	1997	3	20	864	
4	0504	FP-ELECTRI	0	100	0	0	1.00	UT	2,000.00	2,000.00	100	2003	2003	3	86	1,720	
5	1127	BRICK 8"	0	100	27	4	108.00	SF	11.00	11.00	100	2003	2003	3	95	1,129	
6	0803	ASPHALT C	0	100	0	0	4,680.00	SF	2.00	2.00	100	2005	2005	3	54	5,054	

LAND DESCRIPTION

TOTAL OB/XF 15,934

LN	USE CODE	CLS	LAND USE DESCRIPTION	CAP	RD	LOC ZONE	FRONT	DEPTH	TOT LND UTS	UNIT TYPE	DT	DPTH FACT	% COND	TOT ADJ	UNIT PRICE	ADJ UNIT PRICE	LAND VALUE	OTHER ADJUSTMENTS AND NOTES	YEAR	DENSITY	DECL	FRZ	YR	CONSRV
1	000100	C	RES	0	0006	OR	0.00	0.00	0.71	AC		1.00	1.00	1.00	30,000.00	30,000.00	21,300							
2	000100	C	RES	100	0006	OR	0.00	0.00	3.73	AC		1.00	1.00	1.00	30,000.00	30,000.00	111,900							

REVIEW DATE 06/07/2021 BY TWA Total Acres: 4.44 Total Land Value: 133,200 Market: 0 Agricultural: 0 Common: 133,200 PRINTED 07/30/2025 BY SYS

PT OF S1/2
IN OR 752/867
ESMT OR 1236/1430

SELDOMRIDGE MICHAEL & DAWN M
17366 PARADISE DRIVE
HILLIARD, FL 32046

2025

04-3N-23-0000-0003-0040

NASSAU COUNTY PROPERTY

BUILDING CHARACTERISTICS

ELEMENT	CD	CONSTRUCTION
Exterior Wall	20	FACE BRICK 100
Roof Structur	08	IRREGULAR 100
Roof Cover	03	COMP SHNGL 100
Interior Wall	05	DRYWALL 100
Interior Floo	11	CLAY TILE 50
Interior Floo	14	CARPET 50
Air Condition	03	CENTRAL 100
Heating Type	04	AIR DUCTED 100
Bedrooms		3 100
Bathrooms		2.5 100
Frame	02	WOOD FRAME 100
Stories	2.	2. 100
Units		0 100
Occupancy	00	NONE 100
Quality	01	Quality Level 01
DOR CODE	0100	SINGLE FAMILY
MAP NUM		MKT AREA 09
NEIGHBORHOOD/LOC	9001.00	

AREA TYPE	TOTAL GROSS AREA	PCT OF BASE	YEAR	TOT ADJ AREA	SUBAREA MARKET VALUE
BAS	3,094	100	2003	3,094	355,449
BAS	135	100	2008	135	15,510
FGR	647	55	2003	356	40,898
FOP	60	30	2003	18	2,067
FOP	99	30	2003	30	3,447
FSP	275	40	2008	110	12,638
FST	144	55	2003	79	9,075
FUS	951	100	2003	951	109,254
TOTALS	5,405			4,773	548,338

MARKET ADJUSTMENTS

TYPE	MDL	EFF. AREA	TOT ADJ PTS	EFF. BASE RATE	REPL. COST NEW	AYB	EYB	ECON	FNCT		NORM	% COND
0500	01	4,773	86.3010	136.36	650,846	2003	2003	0	0	0	15.75	84.25

2 SFR CUST – 100% - 0 Heated Area: 4180 HX Base Yr 1996

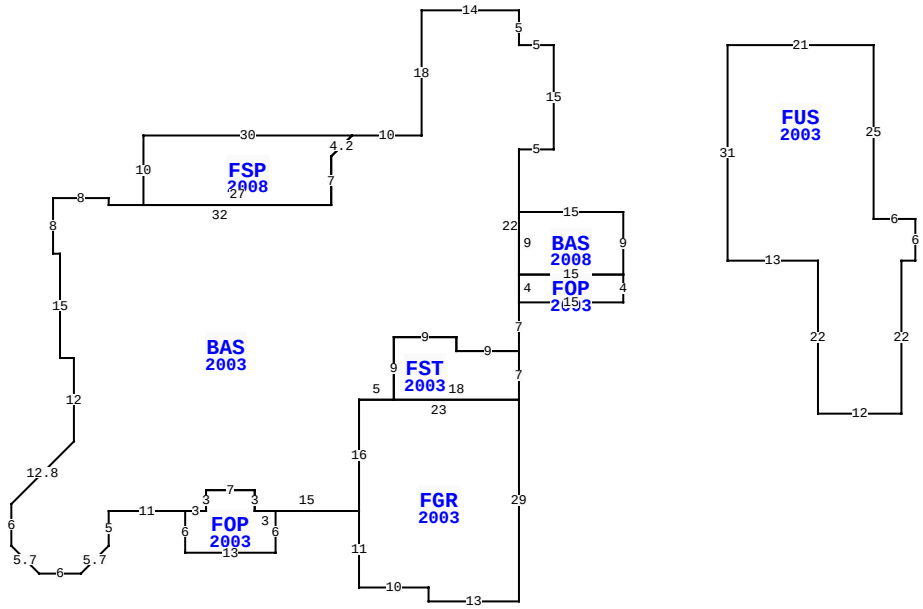

17366 PARADISE DR, HILLIARD

BLD DATE	07/24/2015 KK	LGL DATE	
XF DATE		LAND DATE	05/09/2025 MLU
INC DATE		AG DATE	

NASSAU COUNTY PROPERTY — VALUATION SUMMARY

VALUATION BY		STANDARD
Tax Group: 4	Tax Dist:	
BUILDING MARKET VALUE		708,283
TOTAL MARKET OB/XF VALUE		15,934
TOTAL LAND VALUE - MARKET		133,200
TOTAL MARKET VALUE		857,417
SOH/AGL Deduction		485,274
ASSESSED VALUE		372,143
TOTAL EXEMPTION VALUE	HX HB	50,722
BASE TAXABLE VALUE		321,421
TOTAL JUST VALUE		857,417
NCON VALUE		0
INCOME VALUE		
PREVIOUS YEAR MKT VALUE		809,274

PERMIT NUM	DESCRIPTION	AMT	ISSUED

SALES DATA

OFF RECORD Number	DATE	TYPE INST	Q / U	V / I	RSN CD	SALE PRICE
0752/0867	2/26/1996	WD	U	V	07	100

GRANTOR: COGBURN LARRY & BARBA

GRANTEE: SELDOMRIDGE MICHAEL

BUILDING NOTES

BUILDING DIMENSIONS

BAS=[YR=2003] W5 N5 W14 S18 W10 FSP=[YR=2008] W30 S10 E27 N7 R3 U3 $ D3 L3 S7 W32 N1 W8 S8 E1 S15 E2 S12 D9 L9 S6 R4 D4 E6 U4 R4 N5 E11 FOP=[YR=2003] S6 E13 N6 W3 N3 W7 S3 W3$ E3 N3 E7 S3 E15 FGR=[YR=2003] S11 E10 S2 E13 N29 FST=[YR=2003] N7 W9 N2 W9 S9 E18$ W23 S16$ N16 E5 N9 E9 S2 E9 N7 FOP=[YR=2003] E15 N4 BAS=[YR=2008] N9 W15 S9 E15$ W15 S4$ N22 E5 N15$ PTR= E25 FUS=[YR=2003] E21 S25 E6 S6 W2 S22 W12 N22 W13 N31 $ W25 $.

EXTRA FEATURES

LN	OB/XF CODE	DESCRIPTION	BLD	CAP	L	W	UNITS	UT	Adj R	ADJ UNIT PRICE	ORIG COND	YEAR ON	YEAR ACTUAL	Q	% COND	OB/XF MKT VALUE	NOTES

LAND DESCRIPTION

TOTAL OB/XF 0

LN	USE CODE	CLS	LAND USE DESCRIPTION	CAP	RD	LOC ZONE	FRONT	DEPTH	TOT LND UTS	UNIT TYPE	DT	DPTH FACT	% COND	TOT ADJ	UNIT PRICE	ADJ UNIT PRICE	LAND VALUE	OTHER ADJUSTMENTS AND NOTES	YEAR	DENSITY	DECL	FRZ	YR	CONSRV

REVIEW DATE 06/07/2021 BY TWA Total Acres: 4.44 Total Land Value: 133,200 Market: 0 Agricultural: 0 Common: 133,200 PRINTED 07/30/2025 BY SYS