PT N1/2 OF SEC 4-3N-23E
IN OR 2788/1766
ESMT IN OR 2488/834

HURLEY MICHAEL & BECKY
3361 SUGAR HILL LN
GOLDVEIN, VA 22720

2025

04-3N-23-0000-0001-0120

BUILDING CHARACTERISTICS

ELEMENT	CD	CONSTRUCTION
Exterior Wall	31	HARDIE BRD 100
Roof Structur	03	GABLE/HIP 100
Roof Cover	12	MODULAR MT 100
Interior Wall	05	DRYWALL 100
Interior Floo	13	LVT/LAMNT 100
Interior Floo	01	NONE 0
Air Condition	03	CENTRAL 100
Heating Type	04	AIR DUCTED 100
Bedrooms		5 100
Bathrooms		3.5 100
Frame	02	WOOD FRAME 100
Stories	1.	1. 100
Units		0 100
Quality	01	Quality Level 01
DOR CODE	5000	IMPROVED AG
MAP NUM		MKT AREA 09
NEIGHBORHOOD/LOC	9001.00	

AREA TYPE	TOTAL GROSS AREA	PCT OF BASE	YEAR	TOT ADJ AREA	SUBAREA MARKET VALUE
BAS	2,373	100	2024	2,373	347,692
FOP	554	30	2024	166	24,322
FSP	300	40	2024	120	17,582
FUS	612	100	2024	612	89,670
PTO	65	5	2024	3	440
STR	48	10	2024	5	733
TOTALS	3,952			3,279	480,439

MARKET ADJUSTMENTS

TYPE	MDL	EFF. AREA	TOT ADJ PTS	EFF. BASE RATE	REPL. COST NEW	AYB	EYB	ECON	FNCT		NORM	% COND
0500	01	3,279	92.7360	146.52	480,439	2023	2023	0	0	0	0.00	100.00

1 SFR CUST – 100% - 2024 Heated Area: 2985 HX Base Yr 2024

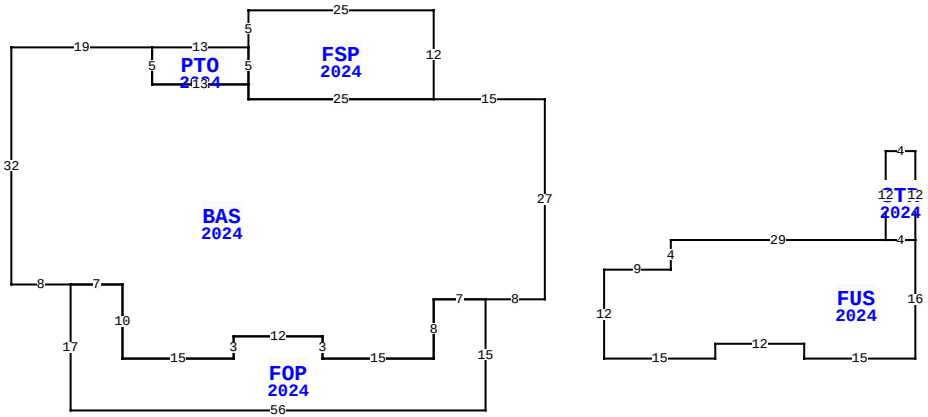

272272 CONNER NELSON RD, HILLIARD

BLD DATE		LGL DATE	
XF DATE		LAND DATE	05/21/2025 MLU
INC DATE		AG DATE	11/04/2024 KBA

NASSAU COUNTY PROPERTY

PAGE 1 of 1 4

VALUATION SUMMARY

VALUATION BY		STANDARD
Tax Group: 4	Tax Dist:	
BUILDING MARKET VALUE		480,439
TOTAL MARKET OB/XF VALUE		73,539
TOTAL LAND VALUE - MARKET		334,527
TOTAL MARKET VALUE		697,205
SOH/AGL Deduction		115,813
ASSESSED VALUE		581,392
TOTAL EXEMPTION VALUE	HX HB	50,722
BASE TAXABLE VALUE		530,670
TOTAL JUST VALUE		888,505
NCON VALUE		0
INCOME VALUE		
PREVIOUS YEAR MKT VALUE		857,076

PERMIT NUM	DESCRIPTION	AMT	ISSUED
230010017	CO ISSUED		08/04/2023
230008146	16X40 VINYL POOL	75,000	06/26/2023
22015524	NEW CONSTR	525,232	10/17/2022

SALES DATA

OFF RECORD Number	DATE	TYPE INST	Q / U	V / I	RSN CD	SALE PRICE
2788/1766	5/19/2025	WD	Q	I	01	1,125,000
GRANTOR: NELSON JOSHUA DAVID &						
GRANTEE: HURLEY MICHAEL & BE						
2563/1413	4/27/2022	WD	Q	V	01	220,000
GRANTOR: COPPS GARY NELSON & C						
GRANTEE: NELSON JOSHUA DAVID						

BUILDING NOTES

BUILDING DIMENSIONS

BAS=[YR=2024;ORIG=72,7] W15 W25 N2 W13 N5 W19 S32 E8 E7 S10 E15 N3 E12 S3 E15 N8 E7 E8 N27 $
PTO=[YR=2024;ORIG=19,0] E13 S5 W13 N5 $
FSP=[YR=2024;ORIG=32,-5] E25 S12 W25 N2 N5 N5 $
STR=[YR=2024;ORIG=118,14] E4 S12 W4 N12 $
FOP=[YR=2024;ORIG=8,32] E7 S10 E15 N3 E12 S3 E15 N8 E7 S15 W56 N17 $
FUS=[YR=2024;ORIG=89,26] E29 E4 S16 W15 N2 W12 S2 W15 N12 E9 N4 $
.

EXTRA FEATURES

LN	OB/XF CODE	DESCRIPTION	BLD	CAP	L	W	UNITS	UT	Adj R	ADJ UNIT PRICE	ORIG COND	YEAR ON	YEAR ACTUAL	Q	% COND	OB/XF MKT VALUE	NOTES
1	0500	FP-PRE FAB	0	100	0	0	1.00	UT	3,500.00	3,500.00	100	2024	2023		100	3,500	
2	0862	POOL VINYL	0	100	0	0	768.00	SF	50.00	50.00	100	2024	2023		98	37,632	
3	0845	KOOL DECK	0	100	0	0	784.00	SF	7.25	7.25	100	2024	2023		100	5,684	
4	0811	CONCRETE B	0	100	0	0	616.00	SF	5.20	5.20	100	2024	2023		100	3,203	
5	0680	POLE SHED	0	100	60	40	2,400.00	SF	10.00	10.00	100	2024	2023		98	23,520	

LAND DESCRIPTION

TOTAL OB/XF 73,539

LN	USE CODE	CLS	LAND USE DESCRIPTION	CAP	RD	LOC ZONE	FRONT	DEPTH	TOT LND UTS	UNIT TYPE	DT	DPTH FACT	% COND	TOT ADJ	UNIT PRICE	ADJ UNIT PRICE	LAND VALUE	OTHER ADJUSTMENTS AND NOTES	YEAR	DENSITY	DECL	FRZ	YR	CONSRV
1	005000	C	AGRICULTURAL	100		OR			10.30	AC		1.00	0.65	0.65	19,500.00	12,675.00	130,552							
2	009530	C	POND	100		OR			3.59	AC		1.00	1.00	1.00	2,500.00	2,500.00	8,975							
3	006000	A	PASTURE - HA	0		OR			10.00	AC		1.00	1.00	1.00	370.00	370.00	3,700							
4	009910	M	MARKET VALUE	0		OR			10.00	AC		1.00	1.00	1.00	19,500.00	19,500.00	195,000							

REVIEW DATE 09/29/2023 BY WW Total Acres: 23.89 Total Land Value: 143,227 Market: 195,000 Agricultural: 3,700 Common: 139,527 PRINTED 07/30/2025 BY SYS