LOT 31
IN OR 1881/1842
FLOOD ACRES UNIT 1 PB 4/20

JAMES MARRIAN A
86109 CARDINAL RD
YULEE, FL 32097

2025

04-2N-27-4290-0031-0000

NASSAU COUNTY PROPERTY

BUILDING CHARACTERISTICS

ELEMENT	CD	CONSTRUCTION
Exterior Wall	12	CEDAR 100
Roof Structur	03	GABLE/HIP 100
Roof Cover	03	COMP SHNGL 100
Interior Wall	05	DRYWALL 100
Interior Floo	14	CARPET 90
Interior Floo	08	SHT VINYL 10
Air Condition	03	CENTRAL 100
Heating Type	04	AIR DUCTED 100
Bedrooms		3 100
Bathrooms		2.5 100
Frame	02	WOOD FRAME 100
Stories	2.	2. 100
Units		0 100
BUD8 Adjustme	04	DIST 01 100
Occupancy	00	NONE 100
Quality	04	Quality Level 04

DOR CODE	0100	SINGLE FAMILY	
MAP NUM		MKT AREA	04
NEIGHBORHOOD/LOC	4053.00		

AREA TYPE	TOTAL GROSS AREA	PCT OF BASE	YEAR	TOT ADJ AREA	SUBAREA MARKET VALUE
BAS	1,283	100	1993	1,283	119,830
FEP	355	80	2001	284	26,525
FGR	624	55	1993	343	32,036
FUS	676	100	1993	676	63,137
UOP	168	20	1993	34	3,176
TOTALS	3,106			2,620	244,703

MARKET ADJUSTMENTS

TYPE	MDL	EFF. AREA	TOT ADJ PTS	EFF. BASE RATE	REPL. COST NEW	AYB	EYB	ECON	FNCT		NORM	% COND
0100	01	2,620	113.9040	113.90	298,418	1988	1988	0	0	0	18.00	82.00

1 SINGLE FAM – 100% - 2015 Heated Area: 1959 HX Base Yr

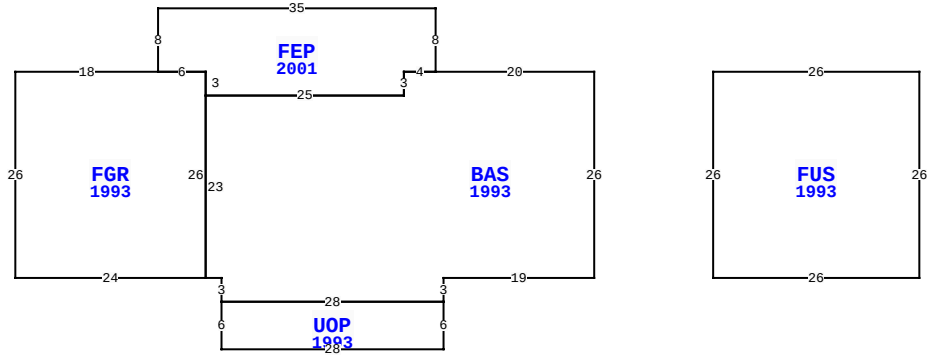

86109 CARDINAL RD, YULEE

BLD DATE		LGL DATE	
XF DATE		LAND DATE	05/08/2025 MLU
INC DATE		AG DATE	

VALUATION SUMMARY

VALUATION BY		STANDARD
Tax Group: 4	Tax Dist:	
BUILDING MARKET VALUE		244,703
TOTAL MARKET OB/XF VALUE		18,379
TOTAL LAND VALUE - MARKET		170,000
TOTAL MARKET VALUE		433,082
SOH/AGL Deduction		8,496
ASSESSED VALUE		424,586
TOTAL EXEMPTION VALUE	13	424,586
BASE TAXABLE VALUE		0
TOTAL JUST VALUE		433,082
NCON VALUE		0
INCOME VALUE		
PREVIOUS YEAR MKT VALUE		412,620

PERMIT NUM	DESCRIPTION	AMT	ISSUED
2006695	CO ISSUED	0	04/20/2021
21006695	MOBILE HOME	0	03/08/2021
B0310861	OTHER	0	01/01/2003
2423	H/AC	2,900	01/06/1988
2865	NEW CONSTR	3,000	01/06/1988
4584	NEW CONSTR	79,856	01/06/1988

SALES DATA

OFF RECORD Number	DATE	TYPE INST	Q / U	V / I	RSN CD	SALE PRICE
1881/1842	8/23/2013	SW	Q	I	02	165,000
GRANTOR: FEDERAL NATIONAL MORT						
GRANTEE: JAMES MARRIAN A						
1823/1890	11/13/2012	CT	U	I	18	100
GRANTOR: CLERK OF COURT						
GRANTEE: FEDERAL NATIONAL MO						

BUILDING NOTES

BUILDING DIMENSIONS

BAS=[YR=1993] W20 FEP=[YR=2001] N8 W35 S8 FGR=[YR=1993]
W18 S26 E24 N26 W6 $ E6 S3 E25 N3 E4 $ W4 S3 W25 S23 E2 S3
UOP=[YR=1993] S6 E28 N6 W28 $ E28 N3 E19 N26 $ PTR= E15
FUS=[YR=1993] E26 S26 W26 N26 $ W15 $.

EXTRA FEATURES

LN	OB/XF CODE	DESCRIPTION	BLD	CAP	L	W	UNITS	UT	Adj R	ADJ UNIT PRICE	ORIG COND	YEAR ON	YEAR ACTUAL	Q	% COND	OB/XF MKT VALUE	NOTES
1	0810	CONCRETE A	0	100	5	19	95.00	SF	6.50	6.50	100	1988	1988	3	52	321	
2	0500	FP-PRE FAB	0	100	0	0	1.00	UT	3,500.00	3,500.00	100	1988	1988	3	62	2,170	
3	0200	BARN WD 0-	0	100	0	0	1,296.00	SF	10.00	10.00	100	2003	2003	3	30	3,888	
4	0937	WELL	0	100	0	0	1.00	UT	6,000.00	6,000.00	100	2021	2021	3	100	6,000	
5	0936	SEPTC TANK	0	100	0	0	1.00	UT	6,000.00	6,000.00	100	2021	2021	3	100	6,000	

LAND DESCRIPTION

TOTAL OB/XF 18,379

LN	USE CODE	CLS	LAND USE DESCRIPTION	CAP	RD	LOC ZONE	FRONT	DEPTH	TOT LND UTS	UNIT TYPE	DT	DPTH FACT	% COND	TOT ADJ	UNIT PRICE	ADJ UNIT PRICE	LAND VALUE	OTHER ADJUSTMENTS AND NOTES	YEAR	DENSITY	DECL	FRZ	YR	CONSRV
1	000100	C	RES	100		OR	0.00	0.00	2.00	AC		1.00	1.00	1.00	85,000.00	85,000.00	170,000							

REVIEW DATE 07/09/2021 BY NW Total Acres: 2.00 Total Land Value: 170,000 Market: 0 Agricultural: 0 Common: 170,000 PRINTED 07/30/2025 BY SYS