IN OR 2718/51

LANGRELL CALEB LISTON
86631 CARDINAL RD
YULEE, FL 32097

2025

04-2N-27-0000-0002-0000

BUILDING CHARACTERISTICS

ELEMENT	CD	CONSTRUCTION
Exterior Wall	15	CONC BLOCK 80
Exterior Wall	05	AVERAGE 20
Roof Structur	03	GABLE/HIP 100
Roof Cover	12	MODULAR MT 100
Interior Wall	05	DRYWALL 100
Interior Floo	13	LVT/LAMNT 90
Interior Floo	11	CLAY TILE 10
Air Condition	03	CENTRAL 100
Heating Type	04	AIR DUCTED 100
Bedrooms		2 100
Bathrooms		2 100
Frame	02	WOOD FRAME 100
Stories	1.	1. 100
Units		0 100
BUD8 Adjustme	04	DIST 01 100
Occupancy	00	NONE 100
Quality	03	Quality Level 03

DOR CODE	0100	SINGLE FAMILY	
MAP NUM		MKT AREA	04
NEIGHBORHOOD/LOC	4053.00		

AREA TYPE	TOTAL GROSS AREA	PCT OF BASE	YEAR	TOT ADJ AREA	SUBAREA MARKET VALUE
BAS	1,320	100	1993	1,320	96,162
FOP	68	30	1993	20	1,457
PTO	48	5	1996	2	146
STP	20	10	1996	2	146
UCP	840	20	1996	168	12,239
UGR	720	45	1993	324	23,604
UOP	40	20	1996	8	583
UOP	735	20	1996	147	10,709
UST	70	45	1996	32	2,331
UST	672	45	1996	302	22,001
TOTALS	4,533			2,325	169,377

MARKET ADJUSTMENTS

TYPE	MDL	EFF. AREA	TOT ADJ PTS	EFF. BASE RATE	REPL. COST NEW	AYB	EYB	ECON	FNCT		NORM	% COND
0100	01	2,325	104.3700	104.37	242,660	1965	1965	0	0	0	30.20	69.80

1 SINGLE FAM – 100% - 2025 Heated Area: 1320 HX Base Yr 2025

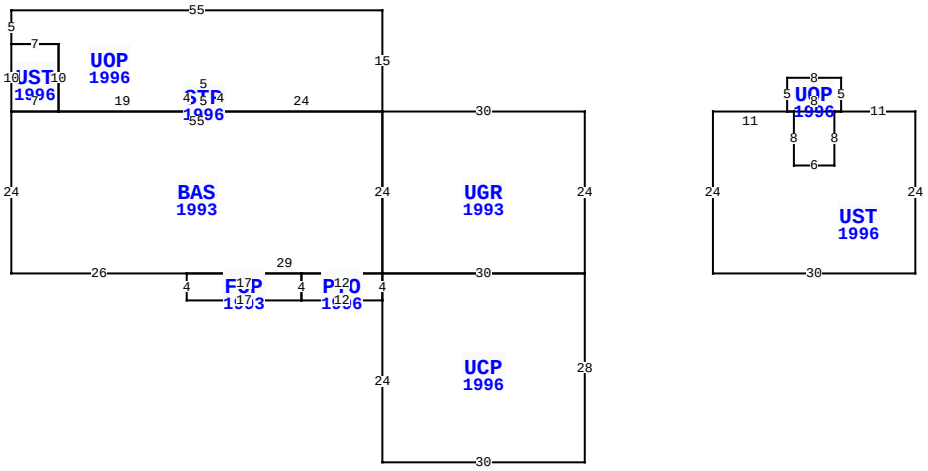

86631 CARDINAL RD, YULEE

BLD DATE		LGL DATE	
XF DATE		LAND DATE	05/08/2025 MLU
INC DATE		AG DATE	

NASSAU COUNTY PROPERTY

PAGE 1 of 1 4

VALUATION SUMMARY

VALUATION BY		STANDARD
Tax Group: 4	Tax Dist:	
BUILDING MARKET VALUE		169,377
TOTAL MARKET OB/XF VALUE		11,005
TOTAL LAND VALUE - MARKET		85,000
TOTAL MARKET VALUE		265,382
SOH/AGL Deduction		624
ASSESSED VALUE		264,758
TOTAL EXEMPTION VALUE	HX HB	50,722
BASE TAXABLE VALUE		214,036
TOTAL JUST VALUE		265,382
NCON VALUE		0
INCOME VALUE		
PREVIOUS YEAR MKT VALUE		241,164

UST1996 IS ABOVE THE UGR1993

PERMIT NUM	DESCRIPTION	AMT	ISSUED
5817	ADDITION	37,825	06/16/1989

SALES DATA

OFF RECORD Number	DATE	TYPE INST	Q / U	V / I	RSN CD	SALE PRICE
2718/51	6/10/2024	WD	Q	I	01	290,000
GRANTOR: PIPKIN DANIEL HOLT						
GRANTEE: LANGRELL CALEB LIST						
2718/48	6/07/2024	QC	U	I	11	100
GRANTOR: PIPKIN VENNIS III						
GRANTEE: PIPKIN DANIEL HOLT						

BUILDING NOTES

BUILDING DIMENSIONS

UST=[YR=1996] W11 S24 E30 N24 W11 UOP=[YR=1996] N5 W8 S5 E8 $ W1 S8 W6 N8 W1 $ PTR= W30 UGR=[YR=1993] W30 UOP=[YR=1996] N15 W55 S5 UST=[YR=1996] S10 E7 N10 W7 $ E7 S10 E19 STP=[YR=1996] E5 N4 W5 S4 $ N4 E5 S4 E24 $ BAS=[YR=1993] W55 S24 E26 FOP=[YR=1993] S4 E17 PTO=[YR=1996] E12 UCP=[YR=1996] S24 E30 N28 W30 S4 $ N4 W12 S4 $ N4 W17 $ E29 N24 $ S24 E30 N24 $ E30 $.

EXTRA FEATURES

LN	OB/XF CODE	DESCRIPTION	BLD	CAP	L	W	UNITS	UT	Adj R	ADJ UNIT PRICE	ORIG COND	YEAR ON	YEAR ACTUAL	Q	% COND	OB/XF MKT VALUE	NOTES
1	0866	POOL FIBER	0	100	0	0	627.00	SF	72.00	72.00	100	1980	1980	3	20	9,029	
2	0810	CONCRETE A	0	100	4	6	24.00	SF	6.50	6.50	100	1980	1980	3	30	47	
3	0845	KOOL DECK	0	100	0	0	556.00	SF	7.25	7.25	100	1980	1980	3	30	1,209	
4	0351	CARPORT MT	0	100	18	20	360.00	SF	10.00	10.00	100	1998	1998	3	20	720	

LAND DESCRIPTION

TOTAL OB/XF 11,005

LN	USE CODE	CLS	LAND USE DESCRIPTION	CAP	RD	LOC ZONE	FRONT	DEPTH	TOT LND UTS	UNIT TYPE	DT	DPTH FACT	% COND	TOT ADJ	UNIT PRICE	ADJ UNIT PRICE	LAND VALUE	OTHER ADJUSTMENTS AND NOTES	YEAR	DENSITY	DECL	FRZ	YR	CONSRV
1	000100	C	RES	100		RSF-2	0.00	0.00	1.00	AC		1.00	1.00	1.00	85,000.00	85,000.00	85,000							

REVIEW DATE 09/23/2024 BY KWA Total Acres: 1.00 Total Land Value: 85,000 Market: 0 Agricultural: 0 Common: 85,000 PRINTED 07/30/2025 BY SYS